Advances in Engineering Software 104 (2017) 1–11

Contents lists available at ScienceDirect

Advances in Engineering Software

journal homepage: www.elsevier.com/locate/advengsoft

Analysis of the vibration attenuation of rotors supported by magnetorheological squeeze film dampers as a multiphysical finite element problem

Petr Ferfecki[a,b], Jaroslav Zapoměl[b,c,*], Jan Kozánek[c]

[a] IT4Innovations National Supercomputing Center, VSB-Technical University of Ostrava, Ostrava, Czechia
[b] Department of Applied Mechanics, VSB-Technical University of Ostrava, 17. listopadu 15, 708 33 Ostrava, Czechia
[c] Institute of Thermomechanics, The Czech Academy of Sciences, Dolejškova 1402/5,182 00 Praha 8, Czechia

ARTICLE INFO

Article history:
Received 26 July 2016
Revised 26 September 2016
Accepted 9 November 2016

Keywords:
Magnetorheological squeeze film dampers
Magnetorheological oils
Closed form formulas
Fitting the coefficients
Multiphysical problem
Rotor vibration attenuation
Damping efficiency

ABSTRACT

Placing damping devices between the rotor and its frame is a frequently used engineering solution for reducing excessive vibrations of rotating machines. Their damping effect must be controllable to achieve their optimum performance in a wide range of operating speeds. This is enabled by magnetorheological squeeze film dampers, the damping force of which can be controlled by changing magnetic flux passing through the lubricating layer. The magnetorheological oil is represented in the developed mathematical model by Bingham material. The magnetic induction in the damper gap is a significant parameter that directly influences resistance against the flow of the magnetorheological oil and generates the additional magnetic force acting on the rotor journal. Therefore, three approaches (1D, 2D, and 3D) to determination of the semi-analytical relations describing its distribution in the lubricating film were proposed, tested, and compared. The appropriate coefficients were determined by repeatedly solving 2D or 3D magnetostatic problems for the specified damper dimensions, design, and rising magnitude of the journal eccentricity utilizing the finite element and least square methods. In the developed computational model of the rotating machine, the rotor shaft is represented by a beam like-body that is discretised into finite elements. The magnetorheological dampers are implemented by springs and force couplings. The principal contribution of this article consists in the development of a methodology, based on three approaches, for the derivation of closed form formulas describing the distribution of magnetic induction in the damper gap as a function of the rotor journal eccentricity and angular position. The individual approaches give some differences in the results that are consequent upon the distinguishing level used for modelling the damping device. The extent of their applicability is discussed in the article. The developed computational models are intended for the investigation of the vibration attenuation of rotor systems in a wide range of rotational speeds.

1. Introduction

The unbalance, ground oscillations, and time variable technological forces are the principal causes of the lateral vibration of rotors. A frequently used technological solution applied to reduce excessive oscillations of rotating machines consists in adding damping devices in the rotor supports. The detailed analysis presented in [1] shows that to achieve their optimum performance in a wide range of operating speeds, their damping effect must be controllable. Several mechanical, hydraulic, and electromagnetic principles applicable for controlling the damping forces are reported in [2-4].

A new concept of the damping devices with controllable damping force is based on the utilization of sensitivity of some lubricating fluids to the electric or magnetic fields (electrorheological, magnetorheological oils). The application of a squeeze film electrorheological damping device in the field of rotordynamics and the development of its mathematical model can be found in [5,6]. A significant improvement of the damping capability suggests that the electrorheological squeeze-film dampers could be very effective for reducing the vibration and controlling the critical speeds of rotor systems. The results of the research of multi-layer electrorheological squeeze film damping devices are presented in [7]. Wang

* Corresponding author.
E-mail addresses: petr.ferfecki@vsb.cz (P. Ferfecki), zapomel@it.cas.cz, jaroslav.zapomel@vsb.cz (J. Zapoměl), kozanek@it.cas.cz (J. Kozánek).

http://dx.doi.org/10.1016/j.advengsoft.2016.11.001
0965-9978/

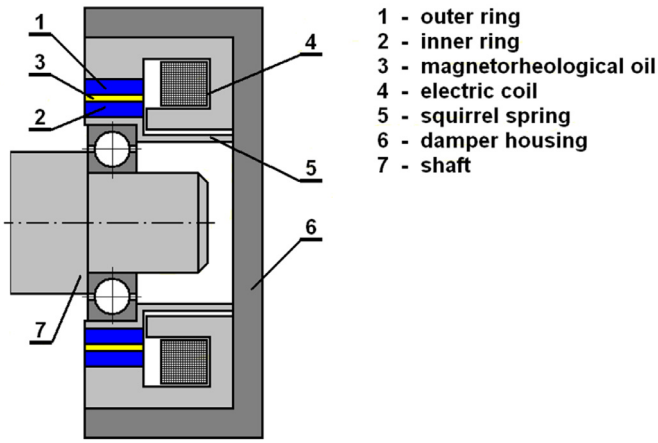

Fig. 1. Magnetorheological squeeze film damper.

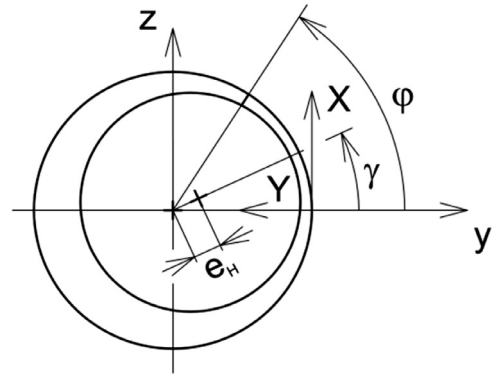

Fig. 2. Coordinate system of the damper.

et al. [8] studied the control method and the vibration attenuation of a flexible rotor equipped with a magnetorheological squeeze film damper by means of experiments. Forte et al. [9] presented results of the theoretical and experimental research of a long magnetorheological damping device. New experimental studies referred to the vibration attenuation of a small test rotor damped by magnetorheological dampers are reported by Carmignani et al. [10]. The analysis of the dynamic performance and vibration control of rotors by means of magnetorheological squeeze film dampers can be found in [11,12]. Zapoměl et al. [13,14] developed the mathematical models of a short and long squeeze film magnetorheological damper intended for analysis of both the steady state and transient rotor vibrations. The models were used for the investigation of vibrations attenuation and stability of the oscillations of simple rotor systems running in different operating regimes [13,15,16].

The principal objective of this article is to proceed to the modelling of flexible rotors mounted on magnetorheological squeeze film dampers concentrating on the determination of the distribution of magnetic induction in the lubricating layer and on calculation of the damping forces. The principal contribution is the development and testing of a methodology, based on three approaches, for derivation of a closed form formula describing magnetic induction in the damper gap as a function of the rotor journal eccentricity and its circumferential position. The appropriate coefficients are determined by means of repeated solutions of magnetostatic problems (planar, spatial) employing the finite element and least square methods. The individual approaches arrive at some differences in the results that are consequent upon the distinguishing level used for modelling the damping device. Their comparison shows that the extent of applicability of the 1D and 2D approaches is limited in general but is fully sufficient for solving the practical problems.

2. The distribution of hydraulic pressure and magnetic induction in the gap of a short magnetorheological damper

The magnetorheological squeeze film dampers (Fig. 1) are damping devices intended for the rotordynamic applications that enable to adapt their damping effect to the current operating conditions. Their main parts are two concentric rings between which there is a thin layer of magnetorheological oil. The inner ring is coupled with the rotor journal by a rolling element bearing and with the damper housing by a squirrel spring. The outer ring is fixed to the damper frame. The lateral vibration of the rotor squeezes the oil film, which produces the damping effect. The force acting between the rotor and the damper housing consists of two components: hydraulic damping force transmitted through the oil layer and elastic force transmitted by the squirrel spring. The electric coils built in the damper housing generate magnetic flux passing through the lubricant and as its resistance against the flow depends on magnetic induction, the change of the electric current makes it possible to control the damping force.

The magnetorheological oils, when affected by a magnetic field, belong to the class of liquids with a yielding shear stress which implies their flow occurs only at those areas where the shear stress between two neighbouring layers exceeds the limit value - the yielding shear stress. They are implemented in the present mathematical models based on assumptions of the classical theory of lubrication [17,18] by a Bingham theoretical material. In the next considerations, it is assumed that the damper is symmetric with respect to its axis and to the plane perpendicular to the shaft centre line and that its geometric and design parameters enable to consider it as short [17,18]. Then the pressure distribution in the full oil film is described by the Reynolds equation adapted for Bingham material and short dampers

$$h^3 p'^3 + 3\left(h^2 \tau_y - 4\,\eta_B\,\dot{h}\,Z\right) p'^2 - 4\tau_y^3 = 0 \quad \text{for } p' < 0, \tag{1}$$

$$h^3 p'^3 - 3\left(h^2 \tau_y + 4\,\eta_B\,\dot{h}\,Z\right) p'^2 + 4\tau_y^3 = 0 \quad \text{for } p' > 0, \tag{2}$$

where

$$h = c - e_H \cos(\varphi - \gamma), \tag{3}$$

p is the pressure, c is the width of the damper gap, h is the thickness of the oil film, e_H is the eccentricity of the rotor journal, Z, φ are the axial and circumferential coordinates, respectively (Fig. 2), γ is the position angle of the line of centres, η_B is the viscosity of the magnetorheological oil when not effected by a magnetic field, τ_y is the yielding shear stress and $(\dot{\cdot})$, $(')$ denote the derivatives with respect to time and the axial coordinate Z, respectively. Eqs. (1) and (2) are valid for $Z > 0$. More details on their solving can be found in [13].

In the areas where the width of the damper gap rises with time, occurrence of cavitation is assumed. In cavitated regions the Reynolds equation does not hold. In accordance with the results of observations it is supposed in the developed mathematical model that pressure of the medium in cavitated areas remains constant and equal to the pressure in the ambient space (atmospheric pressure).

As evident from (1) and (2), the pressure distribution in the full oil film is a function of the magnetorheological oil yielding shear stress. The experiments carried out at different working places and by producers of magnetorheological liquids show that its dependence on magnetic induction can be approximated with sufficient accuracy by a constitutive relationship having the form of a power function

$$\tau_y = k_y B^{n_y}. \tag{4}$$