Robotics and Autonomous Systems 60 (2012) 679–684

Contents lists available at SciVerse ScienceDirect

Robotics and Autonomous Systems

journal homepage: www.elsevier.com/locate/robot

Constraint and exploitation of redundant degrees of freedom during walking

Jun Nishii [a,*], Yoshimitsu Hashizume [a], Shoko Kaichida [a], Hiromichi Suenaga [a], Yoshiko Tanaka [b]

[a] Yamaguchi University, 1677-1 Yoshida, Yamaguchi, 753-8512, Japan

[b] Mitsubishi Electric Information Network Corporation, 1-4-4, Koji-machi, Chiyoda-ku, Tokyo, 102-8483, Japan

ARTICLE INFO

Article history:
Available online 11 January 2012

Keywords:
Joint synergy
Energetic optimality
Biped walking
Backward walking
Uncontrolled manifold analysis

ABSTRACT

What kind of leg trajectories are selected during human walking? To address this question, we have analyzed leg trajectories from two points of view: constraint and exploitation of redundant degrees of freedom. First, we computed the optimal leg swing trajectories for forward and backward walking that minimize energy cost for the condition of having some stretch of elastic components at the beginning of the leg swing and found that the optimal trajectories explain the characteristics of measured trajectories. Second, we analyzed how and when leg joints cooperate to adjust the toe position relative to the hip position during walking and found that joint coordination (i.e., joint synergy) is exploited at some control points during human walking, e.g., the toe height when it passes through its lowest position from the ground and the leg posture at the beginning of the double-support phase. These results suggest that the basic constraint in selecting a leg trajectory would be the minimization of energy cost; however, the joint trajectory is not strictly controlled over the entire trajectory and redundant degrees of freedom are exploited to adjust the foot position at some critical points that stabilizing walking.

© 2011 Elsevier B.V. All rights reserved.

1. Introduction

Redundant degrees of freedom (DOFs) in our bodies are sources of adaptability and dexterity because the redundancy allows for a variety of solutions to accomplish a task. In this paper, we consider the following two problems to understand the underlying control mechanisms that manipulate redundancy during human walking: (1) how the redundancy is constrained and (2) how it is exploited. The first is a traditional problem that asks what kinds of criteria are adopted in the selection of a trajectory from an infinite number of possibilities that can accomplish a given task. This question also asks what the goal of learning is for living bodies, a question that is also important for understanding the learning mechanism of living bodies. The latter is a problem well described in a story told by Bernstein "a skilled blacksmith's hammer hits a given target correctly, but his joint trajectories are not constant and show variability across a series of strikes". From this observation, Bernstein concluded that the variance of each joint trajectory is not independent and that to accomplish a task, variance at critical points (in this case, the hammer position) is suppressed by joint coordination that exploits redundancies [1]. What, then, are the critical points used for stable walking, and how are redundant degrees of freedom in our leg joints exploited during walking? The following sections detail our results concerning these two problems. Section 2 discusses a result about the constraint on DOFs in the selection of leg swing trajectories during forward and backward walking, and Section 3 shows analytical results on joint coordination (i.e., joint synergy) during walking.

2. Constraint on redundant degrees of freedom

Many experimental and theoretical studies have reported that locomotor parameters, such as stride length and frequency, are optimized based on energy cost [2–7]. However, the choice of leg swing trajectory during walking is still under debate. Some work has suggested that no energy supply might be necessary for leg swing [8]; however, some recent studies have suggested that electromyography (EMG) activities are observed during the swing, especially at the end [9,10].

In previous studies, we computed the optimal leg swing trajectory that minimizes energy cost in a smooth touch-down condition [11,12]. The results suggested that the optimal trajectory takes a similar form to the measured one; however, in the latter, the foot was raised slightly higher, which requires additional energy cost in an amount that is explained by the release of elastic energy stored in tendons, which was ignored in previous studies [12].

In this study, we investigated the energetic optimality of the leg swing trajectory for forward and backward walking. For this purpose, we computed the optimal leg swing trajectories that connect the initial and end leg position of the swing phase obtained using human data, considering the effect of elastic components and comparing them with human data.

* Corresponding author. Tel.: +81 83 933 5691; fax: +81 83 933 5691.
E-mail address: nishii@sci.yamaguhci-u.ac.jp (J. Nishii).

0921-8890/$ – see front matter © 2011 Elsevier B.V. All rights reserved.
doi:10.1016/j.robot.2011.12.006

2.1. Experimental methods

2.1.1. Experimental measurements

We measured the leg swing trajectories of subjects equipped with reflective markers at the hip, knee, ankle and toe while they walked forward and backward on a treadmill at speeds of 4.0 km/h. The subjects were two males in their twenties with no disorder in their lower extremities and gave their informed consent prior to the experiment. The walking speed were not informed to the subjects during the experiment and the measurements were started without notifying them after some period to allow for adaptation to walking on the treadmill. The trajectories were recorded by a motion capture system (Himawari SP200, LIBRARY, Inc.) at 200 fps and smoothed by a 6th-order low-pass Butterworth filter with a cutoff frequency of 6 Hz.

2.1.2. Computation of the optimal trajectory

In the computation of the optimal leg swing trajectories, a leg was modeled as a three-link system with joints at the hip, knee and ankle that move in a two-dimensional plane (Fig. 1). The trunk was assumed to move horizontally at a constant speed without vertical movement. The length of each link was determined by the body parameters of the subjects. The mass, position of the center of mass and inertia moment of each link were estimated from the weight and link length of each subject by the method described in [13]. The damping coefficients at each joint were referenced from Hatze [14] and Weiss et al. [15]. The details on the body parameters are shown in the Appendix.

As elastic components, the tendon of the iliopsoas muscles and the Achilles tendon were considered (Fig. 1). In the human body, the iliopsoas connects the thigh or pelvis and backbone by curving around the hip joint; however, to simplify the computation, we assumed that the iliopsoas connects the thigh and the front of the hip. The elastic components were modeled as simple linear springs that do not produce an extension force as actual tendons do not. The elastic coefficients were set to 1.0×10^5 N/m by referring to the data in [16] which indicates that the elastic coefficient of the Achilles tendon is in the range of 1.0×10^5 N/m to 1.0×10^6 N/m. The extension of the tendon at the hip joint at the beginning of swing was assumed to be 15 mm in forward walking and that of the Achilles tendon was assumed to be 1 mm in backward walking. The extension of the Achilles tendon was not considered in forward walking, because the data in [17] suggest that the gastrocnemius medialis tendon shows only negative or small amounts of stretch during the swing phase. The stretch of the tendon at the hip joint in backward walking was also ignored.

In the computation of the optimal trajectory, a sequential quadratic programming (SQP) library, the SNOPT (Stanford Business Software, Inc.) was used and the optimal joint torques at twelve sample points $\tau_i(t_j)$, $(t_j = j/(11T), j = 0, \ldots, 11)$ were computed, where T is the duration of swing phase and subscripts $i = 1, 2, 3$ represent the hip, knee and ankle joint, respectively. The twelve sample points were interpolated using a spline function on torque data every 0.005s, and joint trajectories were computed by an open source software program, Open Dynamics Engine (ODE), from the interpolated torque. The value function to be minimized was the total estimated energy cost E:

$$E = \int_0^T \sum_{i=1}^{3} P(\tau_i(t), \omega_i(t))dt, \tag{1}$$

where ω_i shows the joint angular velocity and P is a function that estimates metabolic rate. In this paper, we used the equation that Alexander proposed based on physiological data [18] as the function P. The joint angles and angular velocities at the toe-off and touch-down positions were randomly selected from typical stride data from the subjects and used as the initial and terminal conditions in the computation (see the Appendix). The swing duration was also given by the data. The Lagrangian and its derivatives required for the computation of the SQP were numerically estimated by a quasi-Newton approximation by the SNOPT.

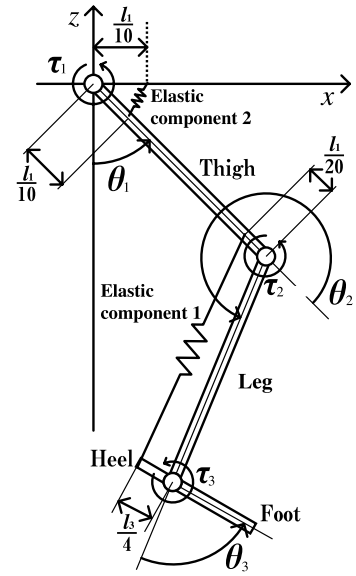

Fig. 1. Three-link model of a leg. l_1, l_2, and l_3 are the lengths of the thigh, leg, and foot, respectively.

2.2. Results and discussion

Fig. 2 shows the experimental results. In each figure the origin is set at the hip position. Fig. 2(a) shows the measured trajectory, and (b) and (c) show the optimal trajectories not including and including the tendon for forward walking, respectively. In the measured trajectory, the ankle and foot are raised up slightly after toe-off, then fall along a slightly curved line and are retracted before landing. The optimal swing trajectory takes a lower trajectory (Fig. 2(b)) than the actual one (Fig. 2(a)) when no tendon is considered. However, when the initial stretch of the tendon around the hip joint was considered, it lifted up the foot and brought the knee forward, and the optimal trajectory took a shape similar to the actual trajectory (Fig. 2(c)). These results suggest that the swing trajectory during forward walking would be designed to suppress the energy cost and the elastic components would also play a role in the design of the trajectory.

Fig. 2(d) shows the measured trajectory, and (e) and (f) show the optimal ones not including and including the tendon for backward walking, respectively. In the case of backward walking, we found the quasi-optimal trajectory, in other words, the second best solution, in which the energy cost is slightly higher than for the optimal trajectory. When the tendon was ignored, the energy costs of the optimal and quasi-optimal trajectories were 3.07 J and 3.13 J, respectively, with the former taking a higher trajectory than the actual one and the latter taking a lower trajectory (Fig. 2(d), (e)). When a slight stretch of the Achilles tendon at the beginning of the swing was considered, the foot in the quasi-optimal trajectory was raised and better matched the characteristics of real human walking (Fig. 2(d), (f)). In this case, the energy costs for the optimal and quasi-optimal trajectories were 3.03 J and 3.33 J, respectively. The reason why the quasi-optimal, as opposed to the optimal, trajectory took a shape similar to the actual trajectory is not known. Our results, however, indicate that backward walking is not simply a matter of reversing the motions of forward walking as suggested

دریافت فوری ← متن کامل مقاله

ISIArticles
مرجع مقالات تخصصی ایران

- ✓ امکان دانلود نسخه تمام متن مقالات انگلیسی
- ✓ امکان دانلود نسخه ترجمه شده مقالات
- ✓ پذیرش سفارش ترجمه تخصصی
- ✓ امکان جستجو در آرشیو جامعی از صدها موضوع و هزاران مقاله
- ✓ امکان دانلود رایگان ۲ صفحه اول هر مقاله
- ✓ امکان پرداخت اینترنتی با کلیه کارت های عضو شتاب
- ✓ دانلود فوری مقاله پس از پرداخت آنلاین
- ✓ پشتیبانی کامل خرید با بهره مندی از سیستم هوشمند رهگیری سفارشات