Expert Systems with Applications 42 (2015) 6586–6597

Contents lists available at ScienceDirect

Expert Systems with Applications

journal homepage: www.elsevier.com/locate/eswa

Modified migrating birds optimization algorithm for closed loop layout with exact distances in flexible manufacturing systems

Sadegh Niroomand [a,*], Abdollah Hadi-Vencheh [b], Ramazan Şahin [c], Béla Vizvári [a]

[a] Department of Industrial Engineering, Eastern Mediterranean University, Famagusta, North Cyprus, Turkey
[b] Department of Mathematics, Khorasgan (Isfahan) Branch, Islamic Azad University, Isfahan, Iran
[c] Department of Industrial Engineering, Gazi University, Ankara, Turkey

ARTICLE INFO

Article history:
Available online 1 May 2015

Keywords:
Flexible manufacturing system
Facility layout problem
Closed loop layout
Migrating birds optimization
Meta-heuristic

ABSTRACT

This paper addresses a new meta-heuristic algorithm to solve a closed loop layout problem. The proposed algorithm applies a modified version of the recently invented migrating birds optimization method. The computational experiments show that in most of the benchmark problems the results obtained from the proposed migrating birds optimization method is better than those obtained by other methods which are published in the literature.

© 2015 Elsevier Ltd. All rights reserved.

1. Introduction

Facility layout problems (FLPs) determine the placement of facilities in order to obtain an efficient arrangement based on some given criteria. The common criterion considered in most of FLPs is minimization of total material handling cost between facilities. Material handling cost plays a very important and critical role while calculating the costs of a manufacturing system. Tompkins et al. (1996) showed that approximately 20–50% of the total cost incurred by a manufacturing system comes from material handling. Obviously, material handling cost of a manufacturing system depends on its layout type and the way its material handling paths are determined. Therefore, in order to reduce the material handling cost, an efficient layout of facilities is necessary.

A classification of FLPs was given by Chae and Peters (2006) and Niroomand and Vizvári (2013) where they mentioned that there are two types of layout problems such as (i) general facility layout problem and (ii) machine layout planning. General facility layout problem locates some departments considering their general area (mostly rectangular departments). Machine layout planning uses the specific shape of machines or departments for designing their related layout e.g. cell formation problem that determines the layout of machines in a manufacturing cell (Javadi, Jolai, Slomp, Rabbani, & Tavakkoli-Moghaddam, 2013). Schematically, FLPs are classified in four well-known categories, namely, open-field, closed loop, single row and ladder layout as are illustrated in Fig. 1. These categories are distinguished by the shape of their material handling path. Das (1993) and Rajasekharan, Peters, and Yang (1998) (also Cong et al., 2012; Niroomand, Takacs, & Vizvari, 2011) discussed an open-field layout in details while Chae and Peters (2006) and Tavakkoli-Moghaddam and Panahi (2007) as well as Niroomand and Vizvári (2013) focused on closed loop layout problems. Single row layout problems were also discussed by many other authors e.g. Kothari and Ghosh (2013), Ou-Yang and Utamima (2013), Amaral (2009), Anjos, Kennings, and Vannelli (2005) and Ficko, Brezocnik, and Balic (2004).

In open-field layout problems, unlimited space is considered to locate the manufacturing cells on the ground. The most prominent limitation of designing an open-field layout is non-overlapping constraints of the model that forces the cells to lie on the ground without any overlapping. Some other constraints are also needed to determine the pick-up points of cells and to measure distances between the cells. Das (1993) introduced one such mathematical model and used a four-step heuristic method to solve it. Rajasekharan et al. (1998) used genetic algorithm to propose a new solution to Das' model. Kim and Kim (2000) considered cells with different input and output points (pick-up and drop-off points) in open-field layout problems.

The literature of closed loop layout is not as rich as other types of layout problems. Just three studies focused on arrangement of cells on a physical closed loop as mentioned before. Tavakkoli-Moghaddam and Panahi (2007) introduced a mathematical model to locate cells just outside of a closed loop. They used

* Corresponding author. Tel.: +90 392 630 1103.
E-mail addresses: sadegh.niroomand@cc.emu.edu.tr, niroomand59@gmail.com (S. Niroomand).

http://dx.doi.org/10.1016/j.eswa.2015.04.040
0957-4174/© 2015 Elsevier Ltd. All rights reserved.

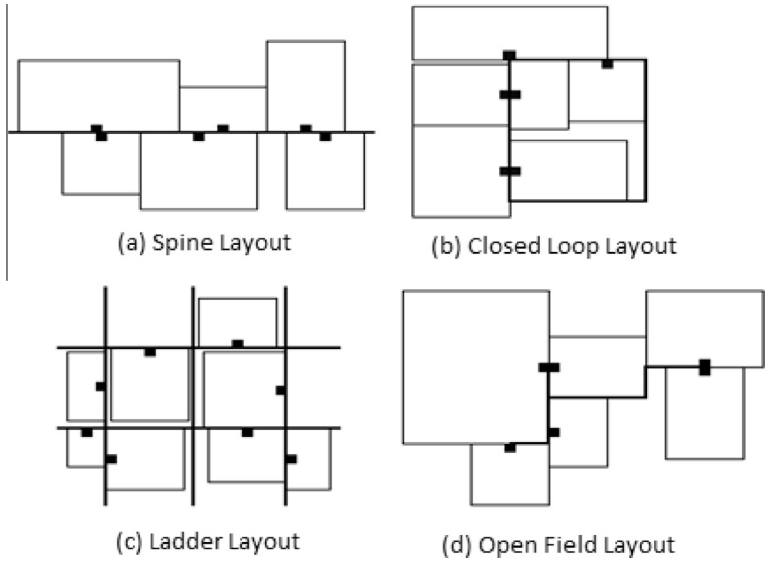

Fig. 1. Different patterns for arrangement of facilities on floor (Niroomand & Vizvári, 2013).

Lingo software and some meta-heuristics to solve their model. Chae and Peters (2006) benefited from Das' model (open-field layout model) and used simulated annealing method to arrange the cells around a given closed loop of material handling path. They located cells on both inside and outside of a closed loop. It should be mentioned that no mathematical model for closed loop layout introduced by Chae and Peters (2006). The most recent study on closed loop layout was done by Niroomand and Vizvári (2013) which introduced an exact mixed integer linear programming (MILP) model that locates cells on both sides of a closed loop. They used Xpress software to solve their model. While the studies of Das (1993) and Rajasekharan et al. (1998) (open-field layout) and Chae and Peters (2006) consider an approximation of distances of cells (Manhattan (rectilinear) distance) in the obtained solution, the model of Niroomand and Vizvári (2013) measures the exact distances between cells. These distances will be explained in next section explicitly.

FLPs tend to be of Nondeterministic Polynomial-time hard (NP-hard) type problems (Garey & Johnson, 1979). In practice, applying exact solution methods to NP-hard problems is time consuming (Ou-Yang & Utamima, 2013). Meaning that when the problem size increases, the problem cannot be solved optimally in a polynomial run time (see Bénabès, Poirson, & Bennis, 2013). Such difficulty motivates a researcher of FLP to focus on developing efficient meta-heuristic algorithms. In most cases, these algorithms solve FLPs in shorter running time in comparison with exact methods. Some well-known meta-heuristic and decision making algorithms applied to FLPs are genetic algorithms, simulated annealing, tabu search, ant colony, etc. (see Aiello, Enea, & Galante, 2006; Brintup, Ramsden, & Tiwari, 2007; Garcia-Hernandez et al., 2013; Hadi-Vencheh & Mohamadghasemi, 2013; Islier, 1998; Kaveh, Majazi Dalfard, & Amiri, 2013; McKendall & Shang, 2006; McKendall, Shang, & Kuppusamy, 2006; Naderi & Azab, 2014; Pierreval, Caux, Paris, & Viguier, 2003; Sahin, Ertogral, & Turkbey, 2010; Solimanpur, Vrat, & Shankar, 2005; Wang, Hu, & Ku, 2005).

Recently, a new meta-heuristic algorithm named migrating birds optimization (MBO) was proposed by Duman, Uysal, and Alkaya (2012). They applied their algorithm to quadratic assignment problems and proved its efficiency. This paper introduces a modification of the MBO algorithm to the closed loop layout model with exact distances which was recently introduced by Niroomand and Vizvári (2013). Taguchi experimental design (Taguchi, 1986) is used to find the best level of parameters of the introduced algorithm. To show applicability of the proposed method the results are compared with those of the MBO algorithm, simulated annealing (SA) algorithm (Kirkpatrick, Gelatt, & Vecchi, 1983; Niroomand & Vizvári, 2014) as well as Xpress software in the design of closed loop layout.

The rest of this paper is organized as follow. Section 2 discusses differences between approximate open-field and closed loop layouts and the exact closed loop layout. The MBO algorithm designed for closed loop layout with exact distances is proposed in Section 3. The proposed modified MBO algorithm is introduced in Section 4. A detailed computational experiment is done in Section 5. The paper ends with a conclusion in Section 6.

2. Problem statement: closed loop layout with exact distances

In this study the closed loop layout model which was explicitly presented in Niroomand and Vizvári (2013) is tackled. The model and its brief literature is conceptually presented in this section.

As aforementioned, Das (1993) introduced a general mathematical model for the open-field layout problem. In that model the objective function is the sum of Manhattan distances of any pair of cells weighted by the flow value between them. The Manhattan distance of a pair of cells is calculated as sum of absolute differences of Cartesian coordinates of their pick-up points as shown by Fig. 2. As closed loop layout is a special case of open-field layout, the concepts of Das' model were used by Chae and Peters (2006) to arrange cells around a rectangular closed loop material handling path meta-heuristically. In both studies by Das (1993) and Chae and Peters (2006), the approximation of material handling cost was evaluated by the objective function of the model because Manhattan distances may not be correct in some cases. In the case of open-field layout the Manhattan distance of a pair of cells is not exact if there is at least one cell laying between that pair of cells (see Fig. 2). Neither in a closed loop formation, the Manhattan distance of a pair of cells yield an exact distance when the cells are placed on two opposite sides of a rectangular closed loop as shown in Fig. 2.

Niroomand and Vizvári (2013) introduced a new MILP model for closed loop layout problems. The model includes the basic open-field model of Das (1993) and some additional constraints.

دریافت فوری ← متن کامل مقاله

ISIArticles
مرجع مقالات تخصصی ایران

- ✓ امکان دانلود نسخه تمام متن مقالات انگلیسی
- ✓ امکان دانلود نسخه ترجمه شده مقالات
- ✓ پذیرش سفارش ترجمه تخصصی
- ✓ امکان جستجو در آرشیو جامعی از صدها موضوع و هزاران مقاله
- ✓ امکان دانلود رایگان ۲ صفحه اول هر مقاله
- ✓ امکان پرداخت اینترنتی با کلیه کارت های عضو شتاب
- ✓ دانلود فوری مقاله پس از پرداخت آنلاین
- ✓ پشتیبانی کامل خرید با بهره مندی از سیستم هوشمند رهگیری سفارشات