Unit commitment by dynamic programming for microgrid operational planning optimization and emission reduction

H. Kanchev, B. Francois *Senior Member, IEEE*, and V. Lazarov

***Abstract*-- This paper presents a 24 hour ahead microgrid power planning using the approach of unit commitment by dynamic programming. The studied system comprises twelve PV-based active generators with embedded storage and three micro gas turbines. Based on the prediction of the energy available from the PV generator, the storage availability, the micro turbine emission characteristics and the load prediction, a central energy management system calculates a 24-hour ahead plan of the power references for three micro gas turbines and the active generators in order to minimize the CO_2 equivalent emissions of the gas turbines.**[1]

***Index Terms*-- Smart grid, micro grid, renewable energy, optimization, emissions minimization, energy management, dynamic programming, unit commitment.**

I. Introduction

One of the main challenges in the last decades is the need to reduce pollutant gas emissions and dependence on fossil fuels. This leads to a large penetration of renewable energy based generators in power systems [1], [2]. In the past electricity was produced mainly in large-scale power plants, therefore electrical systems have been designed mainly for unidirectional energy flows from large power plants to consumers. In the recent years the amount of Distributed Energy Resources (DER) being connected to power systems has increased. This implies considerable research activity on the integration and control of electrical systems comprising large amounts of DER. Although, in the upcoming years, an even greater increase of Renewable Energy Based Generators (REBG) is expected. But the power available from these generators is dependent on the weather forecast and does not always meet the load curve, which causes difficulties to Distribution System Operators (DSO).

The attention is now oriented toward the use of DER for improving grid operation by contributing to ancillary services, increasing the energy reserve and reducing CO_2 emissions. In practice, new facilities are expected to reduce congestion, to minimize the production cost and to maintain the frequency and voltage. These developments require a fundamental redesign of the grid control. To maximize the use of renewable energy based generators a cluster of small-scale power generators has to be locally aggregated and controlled by a Microgrid Central Energy Management System (MCEMS). An example of architecture (also called Smart Grid) is presented on fig.1. The MCEMS apart from controlling and optimizing the local microgrid operation will communicate with the DSO thus helping to facilitate large scale power plants dispatching and further reducing pollution [3], [4] and [5]. The objective of the MCEMS is to manage locally the power production and demand in order to match them in an optimal way. This implies several limitations as:

- the power availability of REBG,
- the power production and demand balance,
- the optimal loading level of micro gas turbines,
- the minimization of micro turbine startups and shutdowns.

Communication can help the MCEMS and the DSO take advantage of the full potential of renewable energy based generators, microgrid operational planning and also facilitate large-scale power plant dispatching.

The Unit Commitment Problem (UCP) consists in selecting the generating units to be used during a scheduling period. The overall problem is divided into sub problems, which are solved consecutively. There are numerous approaches to solve the UCP such as: priority listing, mixed integer programming, particle swarm optimization, dynamic programming, artificial neural networks, genetic algorithm and others [6], [7].

In this paper the dynamic programming is implemented to solve the UCP and to minimize the CO_2 equivalent emissions in the studied microgrid.

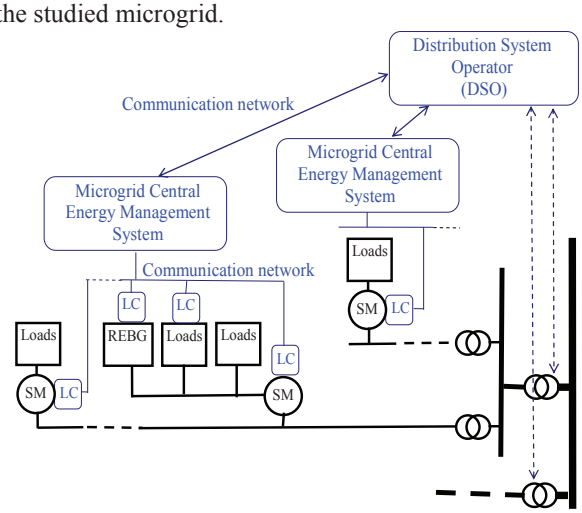

Fig. 1: A microgrid based architecture for smart grid applications

[1] This research is financially supported by the Bulgarian National Research Fund - contract DUNK-01/3 in the framework of the University Research Complex - Technical University of Sofia.

II. The Concept of Active Generator (AG)

One of the main drawbacks of actual photovoltaic generators is that the output power fluctuates and depends on weather conditions. Moreover these generators are only capable of delivering the maximum available power. Hence more power than required may be generated and so may induce grid instabilities. Currently experiences show that the maximum possible penetration ratio of these passive PV generators in European island networks is about to 30%.

One way to increase the penetration ratio is to upgrade actual PV generators in order to transform them into controllable generators. These active generators (AG) offer new flexibilities for the grid system operators and consumers. Active generators contain batteries for long term energy reserve availability and ultra capacitors for short term power regulation (fig. 2) [8]. Thanks to these embedded storage technologies and the dedicated control system, this generator is capable of delivering prescribed power and power system services to the microgrid although it is limited to the energy stored in the batteries.

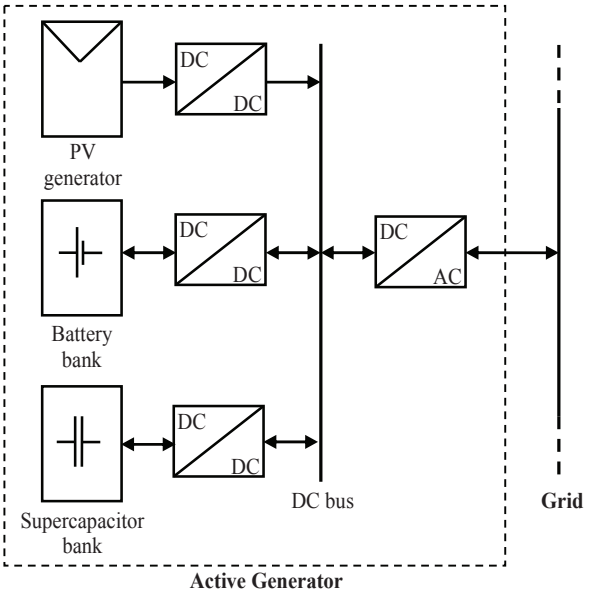

Fig. 2: Scheme of an Active Generator including short and long term energy storage

III. Structure of the Studied Microgrid

The studied microgrid (fig. 3) includes residential loads, 12 PV-based active generators and three micro gas turbines with 30kW, 40kW and 60kW rated power outputs. A communication network is set up between the power equipments and the MCEMS, allowing it to send power references to the generators and to exchange data. The active generators are situated close to each other, have similar characteristics and so they are aggregated by the MCEMS as a single 36 kW active generator.

The global objective consists in matching the total power production to demand in an optimal way [9], [10]. This concept is pertinent in the framework of smart grids through the combined use of an additional communication network within an intelligent energy management system and local controllers [11]. This scheme is a step between current grid requirements and future smart grids.

In our previous works the organization of a microgrid energy management, the integration of photovoltaic active generators have been studied [8], [12]. A multi-objective optimization for long term operational planning has been implemented in order to reduce pollutant emissions [13]. Using this algorithm, a 9% reduction of CO_2 equivalent emissions over a 24 hour operational planning has been achieved. This algorithm optimizes the operational planning for every single discrete time period without taking into account the future system states and the turbine generator startup and shutdown penalties. To improve this algorithm, a unit commitment by dynamic programming algorithm is proposed in this paper.

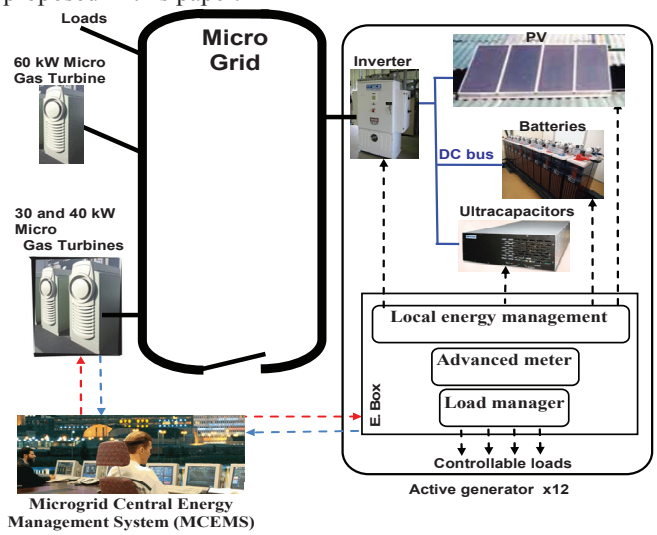

Fig. 3: Microgrid including 12 active generators, 3 gas turbines and a central energy management

IV. Assessment of the CO_2 Equivalent of Micro Gas Turbine Emissions.

The CO_2 equivalent emissions of each Micro Gas Turbine (MGT) are expressed as a non linear function of its power output $C_{i,t} = f(P_{MGT_i}(t))$ (fig. 4). To obtain such a characteristic, masses (g/kWh) of the three main pollutants: NOx, CO and CO_2 are considered as functions of the power output for 30 minutes of operation:

$m_{NOx}_i = f_1(P_{MGT_i})$, $m_{CO_i} = f_2(P_{MGT_i})$ and

$m_{CO2}_i = f_3(P_{MGT_i})$.

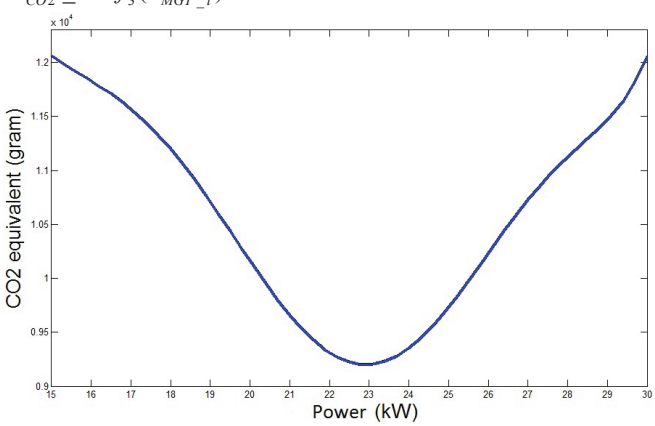

Fig. 4: CO_2 equivalent emissions obtained for a 30kW turbine

دریافت فوری ← متن کامل مقاله

ISIArticles
مرجع مقالات تخصصی ایران

- ✓ امکان دانلود نسخه تمام متن مقالات انگلیسی
- ✓ امکان دانلود نسخه ترجمه شده مقالات
- ✓ پذیرش سفارش ترجمه تخصصی
- ✓ امکان جستجو در آرشیو جامعی از صدها موضوع و هزاران مقاله
- ✓ امکان دانلود رایگان ۲ صفحه اول هر مقاله
- ✓ امکان پرداخت اینترنتی با کلیه کارت های عضو شتاب
- ✓ دانلود فوری مقاله پس از پرداخت آنلاین
- ✓ پشتیبانی کامل خرید با بهره مندی از سیستم هوشمند رهگیری سفارشات