Intelligent Frequency Control in an AC Microgrid: Online PSO-Based Fuzzy Tuning Approach

H. Bevrani, *Senior Member, IEEE*, F. Habibi, P. Babahajyani, M. Watanabe, *Member, IEEE*, and Y. Mitani, *Member, IEEE*

***Abstract*—Modern power systems require increased intelligence and flexibility in the control and optimization to ensure the capability of maintaining a generation-load balance, following serious disturbances. This issue is becoming more significant today due to the increasing number of microgrids (MGs). The MGs mostly use renewable energies in electrical power production that are varying naturally. These changes and usual uncertainties in power systems cause the classic controllers to be unable to provide a proper performance over a wide range of operating conditions. In response to this challenge, the present paper addresses a new online intelligent approach by using a combination of the fuzzy logic and the particle swarm optimization (PSO) techniques for optimal tuning of the most popular existing proportional-integral (PI) based frequency controllers in the ac MG systems. The control design methodology is examined on an ac MG case study. The performance of the proposed intelligent control synthesis is compared with the pure fuzzy PI and the *Ziegler-Nichols* PI control design methods.**

***Index Terms*—Fuzzy logic, intelligent control, microgrid, optimal tuning, particle swarm optimization, secondary frequency control.**

I. Introduction

THE increasing need for electrical power has made several uncommon sources enter into the power systems which increased the systems complexity and uncertainty. Renewable energy sources (RESs) are mostly used as alternative generation units in a modern power system. The increasing penetration of the RESs has many advantages, but also introduces new important challenges, as to whether these sources can operate stable beside conventional generation units or not.

Some technical challenges caused by the RESs are problem of maintaining and protecting of the RESs, contributing in the system voltage and frequency regulation, and proper control designs in both connected and disconnected modes [1]. The desired utilization of these sources requires many standards; hence, the microgrid (MG) concept was first introduced in 1998 by the Consortium for Electric Reliability Technology Solutions (CERTS) [2], [3]. The CERTS introduced an MG as an aggregation of loads and microsources operating as a single system providing both power and heat. The majority of the microsources must be power electronic-based to provide the required flexibility to ensure the operation as a single aggregated system [2], [3].

The basis of the MGs entrance into the power systems are based on the increasing reliability of the conventional power systems, as well as improvement of economical and environmental issues. The MG system using renewable energies helps to reduce global warming and to speed up entering the power industry in the deregulated environments.

The main sources of power in the MGs are small generating units of tens of kW placed at the customer site, and integrated into the power grid in the form of distributed generation (DG). In late 1990s, the main issues related to DG were widely considered by the working groups of the International Council on Large Electric Systems (CIGRE) and the International Conference and Exhibition on Electricity Distribution (CIRED) in their review reports [1]. Typical DGs are diesel engine generators (DEGs), micro turbines, photovoltaic (PV) panels, wind turbines generators (WTGs), energy storages, fuel cells (FCs), and reciprocating engines.

The MGs are placed in the low voltage (LV) and medium voltage (MV) distribution networks. With numerous microsources connected at the distribution level, there are new challenges, such as system stability, power quality, and network operation that must be resolved applying the advanced control techniques at LV/MV levels rather than high voltage levels which is common in conventional power system control. In other words, distribution networks (demand side) must pass from a passive to an active one role.

The existence of the storage devices is vital in the MG systems. Because of light inertia in most of microsources, in case of a serious event such as a load disturbance or outage of a generation unit, the main system indices are influenced, and it may lead to a critical condition. Using of energy storage devices improves the performance and stability in the MG systems. The main energy storage devices which are used as backup devices are storage batteries, flywheels, and ultra capacitors [1].

Nowadays, due to increasing importance of MGs in practice as well as academic researches, several MG projects have been studied around the world, such as the CERTS project in the United States [3], the MG project in Senegal [4], the Kythnos Island MG in Greece [5], and several projects in Japan [6]. In the presence of MGs beside common bulk generation units in the

Manuscript received August 11, 2011; revised November 30, 2011, March 18, 2012; accepted April 11, 2012. Date of publication June 06, 2012; date of current version December 28, 2012. This work is supported in part by the Research Office at University of Kurdistan and Mitani Laboratory at Kyushu Institute of Technology. Paper no. TSG-00326-2011.

H. Bevrani and F. Habibi are with the University of Kurdistan, Sanandaj 66177-15175, Iran (e-mail: bevrani@ieee.org).

P. Babahajyani is with the Isfahan University of Technology, Isfahan 84156-83111, Iran.

M. Watanabe and Y. Mitani are with the Kyushu Institute of Technology, Kitakyushu 804-0011, Japan.

Color versions of one or more of the figures in this paper are available online at http://ieeexplore.ieee.org.

Digital Object Identifier 10.1109/TSG.2012.2196806

1949-3053/$31.00 © 2012 IEEE

power system, the main system indices such as voltage and frequency must be controlled using appropriate control strategies. To preserve desirable performance and stability, three main control structures, i.e., central, single agent, and decentralized control are mostly used.

In the central method, the MG system proceeds to the control local loads and the system parameters by a central control unit. In this method all information about loads and DGs in the MG are collected by a central unit and are decided for loads and DGs [7]–[10]. In the single agent method, the MG system by a great controllable DG proceeds to control local loads and the system parameters. In this method, all the control actions are applied on the controllable DGs. But, the main disadvantage of this method is the high cost of the controllable DGs [11]. In the decentralized method, each DG is equipped by a local controller so needs local feedback control signal [2], [11], [12].

The control units and their associated tuning methods for modern MG systems, which should handle complex multiobjective regulation optimization problems characterized by a high degree of diversification in policies, control strategies, and wide distribution in demand and supply sources, surely must be *intelligent*. The core of such intelligent system should be based on flexible intelligent algorithms [6]. Unlike large power systems, the drooping system is poorly regulated in the MGs to support spinning reserve as an ancillary service in power markets. During last few years, several reports presenting various control methods on frequency regulation, real power compensation, and tie-line control issues, have been published. Some recent works address the scheduling of the droop coefficients for frequency regulation in the MGs [13]. As described in [14], [15], frequency stability in a power system means preserving steady frequency following a heavy disturbance with minimum loss in loads and generation units.

The present paper addresses a new online intelligent approach using a combination of the *fuzzy logic* and the *particle swarm optimization* (PSO) techniques for optimal tuning of the most popular existing proportional-integral (PI) based frequency controllers in the MG systems. In the proposed control strategy, the PI parameters are automatically tuned using fuzzy rules, according to the online measurements. In order to obtain an optimal performance, the PSO technique is used online to determine the membership functions parameters. The proposed optimal tuning scheme offers many benefits for an MG frequency control with numerous DGs and RESs, while the classical tuning methods may not be applicable to provide a desirable performance over a wide range of operating conditions. The proposed intelligent PSO-fuzzy PI control design methodology is used for secondary frequency control in an ac MG.

To demonstrate the effectiveness of the proposed control schemes, the result is compared with the *pure fuzzy PI* control method as well as classical PI control design using *Ziegler-Nichols* technique. In the developed tuning algorithm, the physical and engineering aspects of MG systems have been fully considered. Simulation studies are performed to illustrate the capability of the proposed intelligent control approach.

Two scenarios for secondary frequency control are considered. In the first scenario, it is assumed that only the DEG unit is responsible, but in the second one, the FC unit also contributes in the secondary frequency control. The FC unit acts as a backup for reducing the destructive effects of the frequency deviations [16]. Using this approach, the amount of pressure on the generator and capacity of storage energy devices, in a long term, can be reduced.

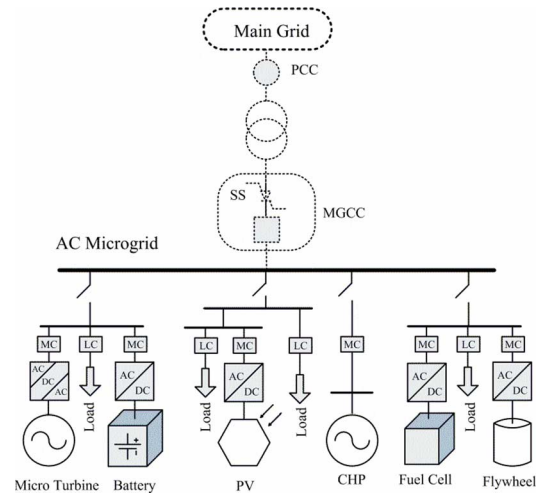

Fig. 1. Simplified ac MG structure.

This paper organized as follows: Section II provides an overview on the ac MG structures and their essential control loops. In Section III, an isolated ac MG system is introduced as case study. Conventional and pure fuzzy PI-based control designs are addressed in Section IV. In Section V, the proposed intelligent control strategy based on the fuzzy logic and PSO is explained. Several simulations for studding the performance of the applied algorithm and the results are presented in Section VI. Finally, in Section VII, the conclusions are presented.

II. AC Microgrids

A. AC Microgrid Structure

An ac MG is an interconnection of domestic distributed loads and low voltage distributed energy sources, such as microturbines, wind turbines, PVs, and storage devices. A simplified ac MG architecture is shown in Fig. 1. This MG consists of a group of radial feeders as a part of a distribution system. The domestic load can be divided to sensitive/critical and nonsensitive/noncritical loads via separate feeders. The sensitive loads must be always supplied by one or more microsources, while the nonsensitive loads may be shut down in case of contingency, or a serious disturbance.

Each unit's feeder has a circuit breaker and a power flow controller commanded by the central controller or energy manager. The circuit breaker is used to disconnect the correspondent feeder (and associated unit) to avoid the impacts of sever disturbances through the MG. The ac MG can be connected to the distribution system by a point of common coupling (PCC) via a static switch (SS). The static switch is capable to island the MG for maintenance purposes or when faults or a contingency occurs.

For the feeders with sensitive loads, local power supply, such as diesel generators or energy capacitor systems (ECSs) with enough energy saving capacity are needed to avoid interruptions

دریافت فوری ← متن کامل مقاله

ISIArticles
مرجع مقالات تخصصی ایران

- ✓ امکان دانلود نسخه تمام متن مقالات انگلیسی
- ✓ امکان دانلود نسخه ترجمه شده مقالات
- ✓ پذیرش سفارش ترجمه تخصصی
- ✓ امکان جستجو در آرشیو جامعی از صدها موضوع و هزاران مقاله
- ✓ امکان دانلود رایگان ۲ صفحه اول هر مقاله
- ✓ امکان پرداخت اینترنتی با کلیه کارت های عضو شتاب
- ✓ دانلود فوری مقاله پس از پرداخت آنلاین
- ✓ پشتیبانی کامل خرید با بهره مندی از سیستم هوشمند رهگیری سفارشات