Operation of Grid-Connected DFIG Under Unbalanced Grid Voltage Condition

Yi Zhou, *Student Member, IEEE*, Paul Bauer, *Senior Member, IEEE*, Jan A. Ferreira, *Fellow, IEEE*, and Jan Pierik

***Abstract*—Doubly fed induction generator (DFIG) still shares a large part in today's wind power market. It provides the benefits of variable speed operation cost-effectively, and can control its active and reactive power independently. Crowbar protection is often adopted to protect the rotor-side voltage source converter (VSC) from transient overcurrent during grid voltage dip. But under unbalanced grid voltage condition, the severe problems are not the transient overcurrent, but the electric torque pulsation and dc voltage ripple in the back-to-back VSCs. This paper develops dynamic models in MATLAB/Simulink, validates it through experiments, investigates the behavior of DFIG during unbalanced grid voltage condition, and proposes new controllers in separated positive and negative sequence. Methods to separate positive and negative sequence components in real time are also developed, and their responses to unsymmetrical voltage dip are compared. Simulation results prove that the separated positive and negative sequence controllers limit the torque pulsation and dc voltage ripple effectively.**

***Index Terms*—Control, doubly fed induction generator (DFIG), operation, unbalanced.**

I. Introduction

THE installed capacity of wind power in Europe reached approximately 33,600 MW until the end of 2004. The demand for connecting large-scale wind parks to the power grid is still on the rise. The increasing size of wind turbine and wind park resulted in new interconnection rules or grid codes. Today, there is a need to control wind power, both in active and reactive power, and to be able to stay connected with the grid when grid faults happen. The doubly fed induction generator (DFIG) has the largest world market share of wind turbine concepts since the year 2002 [1], because of its ability to provide variable speed operation and independent active and reactive power control in a cost-effective way. As DFIG's stator is directly connected with ac grid, it has poor low-voltage ride through (LVRT) capability due to the poorly damped flux oscillations during grid voltage dip. Many studies have been conducted on the LVRT capability of DFIG [3]–[6], [9], with most of them focused on the behavior and protection of DFIG under symmetrical fault. During the symmetrical fault, transient overcurrent in the rotor is identified as the most severe LVRT problem of the DFIG, because the rotor-side voltage source converter (VSC) is very sensitive to thermal overload. Thus, the active crowbar protection is designed to short-circuit the rotor under symmetrical grid voltage dip, both to protect the rotor-side VSC and to damp out the oscillations faster. In reality, however, unsymmetrical fault happens much more frequently than symmetrical fault. Furthermore, it is identified that the unbalanced voltages can occur in a weak power grid even during normal operation [7], [8], [16], [17]. Under the unbalanced grid voltage, the most severe operation problem of DFIG may not be the transient overcurrent, but the large electric torque pulsation that causes wear and tear of the gearbox, and large voltage ripple in the dc link of back-to-back VSC that may decrease the lifetime of the dc capacitance. Literatures [10], [11] define the instantaneous active and reactive power that can be used to design and operate the grid-connected VSC under unbalanced grid situations [12]–[15]. Literatures [16], [17], [19] on the control system of DFIG under unbalanced grid voltage condition [16] used a feedforward loop on the classical-field-oriented current (FOC) controller to limit torque ripple, which was simple and robust. But its performance depended on the filter. In [17], the grid VSC was controlled as a STATCOM and supplied reactive power to compensate the unbalanced grid voltage. Its performance depended on the current ratings of grid VSC and impedance between generator terminal and fault location. However, a theoretical analysis of DFIG under unsymmetrical fault is still missing, and a systematic approach to limit both torque pulsation and dc voltage ripple is required. In this paper, the behavior of DFIG under unbalanced grid voltage is thoroughly analyzed, and a dual-sequence FOC controller is proposed. The rotor VSC is controlled to limit the torque pulsation, and the grid VSC is controlled to limit the dc voltage ripple. A dynamic model of DFIG is made in MATLAB/Simulink. Simulation results prove the effectiveness of the proposed control system.

II. DFIG System Description, Modeling, and Verification

A. System Description

Fig. 1 describes the DFIG system and the proposed controllers. Rotor VSC and grid VSC are both controlled in positive and negative sequences. According to symmetrical components theory [2], during unbalanced voltage dip, the system can be decoupled into positive, negative, and zero sequence. The positive and negative sequences are balanced three-phase systems, which can be transferred to positive dq and negative dq system. Their voltages and currents are dc values at steady state, thus a simple PI controller can be used.

Manuscript received November 12, 2007; revised April 15, 2008. First published February 2, 2009; current version published February 19, 2009. This work was supported in part by the Project PhD@Sea, which was substantially funded under the BSIK Program of the Dutch Government, and by the consortium WE@Sea. Paper no. TEC-00424-2007.

Y. Zhou, P. Bauer, and J. A. Ferreira are with the Electrical Power Processing Group, Delft University of Technology, Delft 2628CD, The Netherlands (e-mail: yi.zhou@tudelft.nl).

J. Pierik is with the Energy Research Center of Netherlands, Petten 1755ZG, The Netherlands (e-mail: pierik@ecn.nl).

Digital Object Identifier 10.1109/TEC.2008.2011833

0885-8969/$25.00 © 2009 IEEE

Authorized licensed use limited to: TU Delft Library. Downloaded on July 06,2010 at 12:58:56 UTC from IEEE Xplore. Restrictions apply.

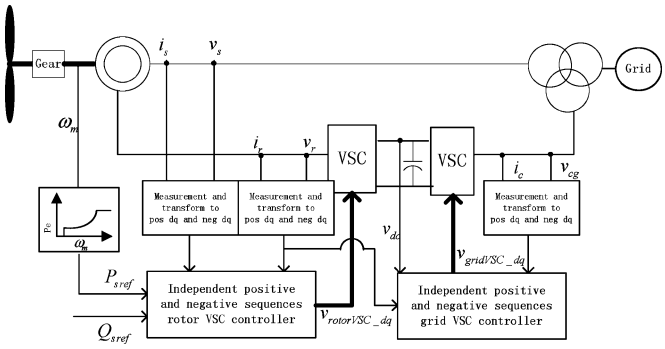

Fig. 1. Simplified diagram of DFIG system with proposed controllers.

Following assumptions are required to fully decouple positive and negative sequences.

1) DFIG's stator and rotor windings are assumed to be symmetrical.
2) Grid VSC's three-phase ac inductances and resistances are symmetrical.

The reference stator currents and grid converter currents are calculated according to instantaneous reactive power theory [10], [11]. Here, only a three-phase three-wire system is studied, where zero sequence is omitted. The choice is justified by the following reasons.

1) The transformer is often Y/Δ connected.
2) The neutral point of stator winding of DFIG is not grounded.

In the following sections, the simulation results of DFIG under symmetrical and unsymmetrical voltage dips will be presented first, and then instantaneous reactive power theory will be used to analyze the behavior of DFIG.

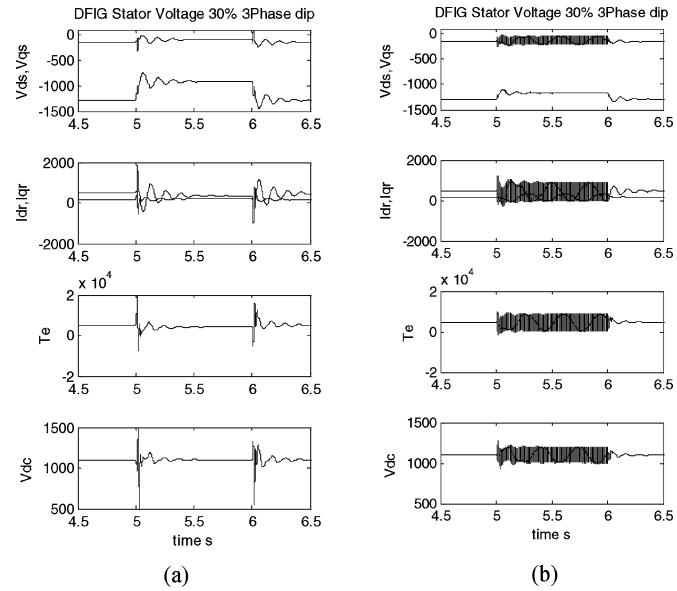

Fig. 2. Simulation results of DFIG under (a) symmetrical and (b) unsymmetrical voltage dips. Graphs from top to bottom are stator voltages, rotor currents, electric torques, and dc voltages, respectively.

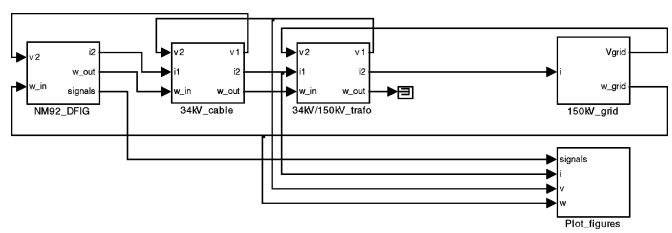

Fig. 3. Simulink model of DFIG system.

B. Symmetrical and Unsymmetrical Voltage Dip

Simulation results of DFIG under symmetrical and unsymmetrical voltage dips are shown in Fig. 2.

Fig. 2(a) shows that under symmetrical voltage dip, the most severe problem is the transient overcurrent in the rotor. This overcurrent problem is generally protected by the so-called "active crowbar protection," which uses thyristor-controlled resistor bank to short-circuit the rotor windings.

Fig. 2(b) shows that under unsymmetrical voltage dip, the maximum rotor currents can be smaller, but have 100 Hz oscillations, and cause large torque ripple and dc voltage ripple. It is worth noting that the magnitude of rotor current oscillation depends on the moment of voltage dip. The starting moment of the voltage dip determines the initial conditions of the stator currents, and thus determines the natural response of the stator currents. The natural response of stator currents has a large influence on the transient rotor currents.

C. Modeling and Validation

The complete DFIG system is modeled in MATLAB/Simulink. These models are developed in the synchronous rotating *dq* reference frame in order to improve the simulation speed, because the balanced three-phase voltage and current in the synchronous rotating *dq* reference frame are dc values at steady state. The Simulink model of DFIG system is shown in Fig. 3.

Experimental data to verify the DFIG Simulink model was provided by Chalmers University [18], and the Simulink model will be used to prove the effect of the proposed new controller. Both symmetrical and unsymmetrical voltage dips were applied on the terminal of a 850 kW DFIG, as shown in Fig. 4. The parameters of the DFIG are listed in Table I.

In Figs. 4 and 5, before 2.0 s, the DFIG was under normal operation. Then, between 2.0 and 2.1 s, unsymmetrical voltage dip was applied, which lasts about 0.1 s. Thereafter, symmetrical voltage dip was applied between 2.1 and 2.2 s, which lasts about 0.1 s. Finally, after 2.2 s, DFIG's terminal voltage was recovered to normal value. The measured stator voltage dips were applied on the terminal of DFIG in the simulink model. Simulation result were compared with measurement in Fig. 5, which shows good agreement between simulated and measured active power of DFIG during both unsymmetrical and symmetrical voltage dips.

Authorized licensed use limited to: TU Delft Library. Downloaded on July 06,2010 at 12:58:56 UTC from IEEE Xplore. Restrictions apply.

دریافت فوری ← متن کامل مقاله

ISIArticles
مرجع مقالات تخصصی ایران

- ✓ امکان دانلود نسخه تمام متن مقالات انگلیسی
- ✓ امکان دانلود نسخه ترجمه شده مقالات
- ✓ پذیرش سفارش ترجمه تخصصی
- ✓ امکان جستجو در آرشیو جامعی از صدها موضوع و هزاران مقاله
- ✓ امکان دانلود رایگان ۲ صفحه اول هر مقاله
- ✓ امکان پرداخت اینترنتی با کلیه کارت های عضو شتاب
- ✓ دانلود فوری مقاله پس از پرداخت آنلاین
- ✓ پشتیبانی کامل خرید با بهره مندی از سیستم هوشمند رهگیری سفارشات