SMES Based Dynamic Voltage Restorer for Voltage Fluctuations Compensation

Jing Shi, Yuejin Tang, Kai Yang, Lei Chen, Li Ren, Jingdong Li, and Shijie Cheng, *Senior Member, IEEE*

***Abstract*—This paper presents a superconducting magnetic energy storage (SMES) based dynamic voltage restorer (DVR) to protect consumers from the grid voltage fluctuations. Due to the characteristic of high energy density and quick response, a superconducting magnet is selected as the energy storage unit to improve the compensation capability of DVR. This paper analyses the operation principle of the SMES based DVR, and designs the DVR output voltage control method. The control system mainly consists of two parts, the PWM converter controller and the DC/DC chopper controller. The PWM converter controller adopts double-loop control strategy, with an inner current regulator and an outer voltage controller. Combining the coordinated control of DC/DC chopper, the DVR can regulate output voltage accurately and quickly to compensate the system voltage fluctuations. Using MATLAB SIMULINK, the models of the SMES based DVR is established, and the simulation tests are performed to evaluate the system performance.**

***Index Terms*—DVR, series PWM converter, SMES, voltage fluctuation compensation.**

I. Introduction

SUPERCONDUCTING MAGNETIC ENERGY STORAGE (SMES), characterized by its highly efficient energy storage, quick response, and power controllability, is expected to contribute to high-quality power of the power systems. The researches on SMES for power quality improvement mainly have two methods. One is utilizing SMES as an uninterruptible power supply (UPS) to protect sensitive loads [1], [2]. The SMES-UPS needs to compensate full power for the load, which requires large capacity converters and energy storage units. The other method is connecting SMES in parallel with the system and compensates system voltage fluctuation [3]. The parallel compensation method controls the system voltage indirectly through regulating the injecting current of SMES. The compensation capability is influenced by the system short circuit capacity and the location of SMES.

Manuscript received October 19, 2009. First published March 25, 2010; current version published May 28, 2010. This work was supported by National Basic Research Program of China-973 Program under Grant 2009CB219702, National High Technology Research and Development Program of China (863 Program) under Contract 2006AA03Z209, and Key Project of Chinese Ministry of Education (107128).

J. Shi, Y. Tang, L. Chen, L. Ren, J. Li, and S. Cheng are with R&D Center of Applied Superconductivity, Huazhong University of Science and Technology, Hubei, Wuhan 430074, China (e-mail: shijing_hust@126.com).

K. Yang is with Communication and Automation Center of Sichuan Electric Power Company, Sichuan, Chengdu 610041, China (e-mail: yangkai.sepc@gmail.com).

Color versions of one or more of the figures in this paper are available online at http://ieeexplore.ieee.org.

Digital Object Identifier 10.1109/TASC.2010.2041499

For the dynamic voltage fluctuation compensation, the dynamic voltage restorer (DVR) which uses a series-connected topology is a more cost-effective solution. The basic operating principle of a DVR is to insert a voltage of required magnitude and phase in series with a distribution feeder to maintain the desired amplitude and waveform for the load voltage. Moreover, the compensation capability is sensitive to the load level, and is independent of the system short circuit capacity and the installation position. To improve the compensation capability of DVR, such as the large amplitude or long duration voltage fluctuation, the energy storage unit is essential to supply the power transfer during the voltage compensation [4]. In this paper, a superconducting magnet is introduced as the energy storage unit of the DVR. Firstly, the operation principle of the SMES based DVR is analysed. Secondly, the voltage compensation control method is designed. Then, the dynamic response of the SMES based DVR is evaluated using MATLAB simulation.

II. Topology and Model of the DVR

The basic topology of SMES based DVR is shown in Fig. 1. The DVR consists of three single-phase series transformers, a PWM converter, a DC chopper and a superconducting magnet (SC). Generally, the PWM converter adopts controllable switching device, which can control the active and reactive power transfer in four quadrants quickly and independently. The output of the converter is filtered by LC-filters in order to reduce the influence from the high switching frequency. Due to the inherent current source characteristic of the magnet, a DC/DC chopper is adopted to regulate the voltage across the magnet to satisfy the required power transfer. The DC chopper significantly decouples the superconducting magnet from the power system and protects the magnet from the disturbances of the power system.

A. Series PWM Converter

The mathematical model of the series PWM converter in synchronous rotating coordinates is given by (1):

$$\begin{cases} L\frac{di_{td}}{dt} = -Ri_{td} + \omega Li_{tq} + u_{12d} - u_{td} \\ L\frac{di_{tq}}{dt} = -Ri_{tq} - \omega Li_{td} + u_{12q} - u_{tq} \\ C_1\frac{du_{12d}}{dt} = i_d - i_{td} + \omega C_1 u_{12q} \\ C_1\frac{du_{12q}}{dt} = i_q - i_{tq} - \omega C_1 u_{12d} \end{cases} \quad (1)$$

where ω is the angular frequency of source voltage at AC side and it is also the synchronous rotating frequency of d-q axis. In the synchronous rotating d-q frame, the d axis is directed in line with the source voltage vector. The current components in d axis

1051-8223/$26.00 © 2010 IEEE

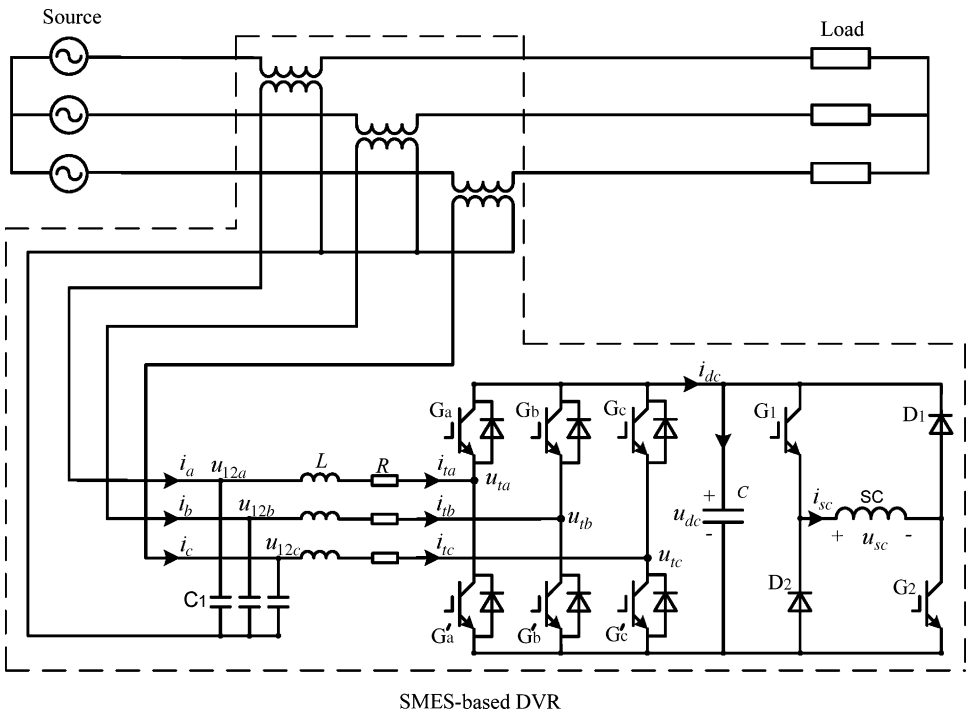

Fig. 1. Basic topology of the SMES based DVR.

and q axis (i_d and i_q) can be defined as the active component and reactive component of the current, respectively.

To improve the dynamics of controller, the active power balance between AC side and DC side must be considered in the power control. The dynamic active power balance can be expressed as:

$$p_{ac} = p_{dc} \pm p_{loss} \tag{2}$$

where p_{loss} includes the switching and conduction loss in the converter and the chopper. The power loss becomes positive when the power is transferred from the AC system to the superconducting magnet, otherwise, the power loss is negative. Then, (2) can be rearranged as:

$$Cu_{dc}\frac{du_{dc}}{dt} = \frac{3}{2}u_{sd}i_d + \frac{3}{2}u_{sq}i_q - p_{chopper} \mp p_{loss} \tag{3}$$

where $p_{chopper}$ is the power transfer between the magnet and the series converter.

B. DC Chopper

In the process of voltage compensation, the DC chopper is utilized to control energy transfer of the superconducting magnet. The DC chopper has two basic operation modes.

1) Charging mode. The DC chopper absorbs active power from AC side and charge the superconducting magnet. In this mode, G1 is on at all times, and G2 is alternately on and off during each chopper cycle. When G2 is on for D (duty cycle) per unit time, the magnet is charged from the DC link through G1 and G2 in series. When G2 is off, the magnet current is bypassed through G1 and D1.
2) Discharge mode. The DC chopper delivers active power to AC side and discharge the superconducting magnet. In this mode, G1 is off at all times, and G2 is alternately on and off during each chopper cycle. When G2 is on for D per unit time, the magnet current is bypassed through G2 and D2. When G2 is off, the magnet discharges to the DC link through D1 and D2 in series.

Adopting the state space averaging method, the mathematical model of the DC chopper can be described as:

$$\begin{cases} C\frac{du_{dc}}{dt} = -Di_{sc} + i_{dc} & \text{charge state} \\ C\frac{du_{dc}}{dt} = (1-D)i_{sc} + i_{dc} & \text{discharge state} \end{cases} \tag{4}$$

According to the dynamic active power balance of the converter represented by (3), the model of DC chopper can be deduced as:

$$\begin{cases} p_{chopper} = Du_{dc}i_{sc} & \text{charge state} \\ p_{chopper} = (1-D)u_{dc}i_{sc} & \text{discharge state} \end{cases} \tag{5}$$

III. Control System

The control system of SMES based DVR has three parts: (1) voltage compensation control, which detects the voltage fluctuation and generates the reference voltage for compensation; (2) series converter control, which controls its output voltage according to the reference voltage for compensation; (3) DC chopper control, which regulates the power transfer of the superconducting magnet in coordinated with the voltage control of the PWM converter.

دریافت فوری ← متن کامل مقاله

ISIArticles
مرجع مقالات تخصصی ایران

- ✓ امکان دانلود نسخه تمام متن مقالات انگلیسی
- ✓ امکان دانلود نسخه ترجمه شده مقالات
- ✓ پذیرش سفارش ترجمه تخصصی
- ✓ امکان جستجو در آرشیو جامعی از صدها موضوع و هزاران مقاله
- ✓ امکان دانلود رایگان ۲ صفحه اول هر مقاله
- ✓ امکان پرداخت اینترنتی با کلیه کارت های عضو شتاب
- ✓ دانلود فوری مقاله پس از پرداخت آنلاین
- ✓ پشتیبانی کامل خرید با بهره مندی از سیستم هوشمند رهگیری سفارشات