Electrical Power and Energy Systems 65 (2015) 299–306

Contents lists available at ScienceDirect

Electrical Power and Energy Systems

journal homepage: www.elsevier.com/locate/ijepes

The influence of GUPFC FACTS device on small signal stability of the electrical power systems

D.B. Valle *, P.B. Araujo

Avenida Prof. José Carlos Rossi, 1370, 15385-000 Ilha Solteira, São Paulo, Brazil

ARTICLE INFO

Article history:
Received 5 June 2013
Received in revised form 23 September 2014
Accepted 10 October 2014
Available online 4 November 2014

Keywords:
Electric power system
FACTS
GUPFC
Small-signal stability
Supplementary stabilizers

ABSTRACT

In this paper a power injection model is presented for the Generalized Unified Power Flow Controller (GUPFC), which facilitates its representation in the electric power system (EPS). This model of the GUPFC device becomes an attractive option to be implemented in power flow and optimal power flow programs. An efficient structure for the GUPFC control system is also presented in the article. This can be used to represent the dynamics in both stability analysis of small perturbations, which is the focus of this work, and in transient stability analysis (large disturbances) of the EPS. Considering the most basic GUPFC configuration, the proposed structure can control four active and reactive power flows in two lines, the voltage at the common installation bus; addition to these characteristics inherent in the GUPFC, this device can provide damping for the electromechanical oscillations of the EPS, as a POD (Power Oscillation Damping) controller is coupled to the control loop. Simulations are performed on one multimachine test system, whose results are analyzed and discussed in this paper, in order to analyze the performance of the power injection model and its proposed control structure in the damping of oscillations.

© 2014 Elsevier Ltd. All rights reserved.

Introduction

Faced with a scenario of high electric energy demand due to an increasing population and to economic development, the construction of new power stations and the expansion of the transmission grid is becoming of increasing importance to meet the needs which, in general, are growing constantly. Moreover, since the beginning of the century, the political, economic and, in particular, environmental restrictions are becoming one of the greatest challenges for researchers, conservationists, government officials and communities worldwide.

With the goal of trying to delay emergency situations with the need of new power lines, by making existing transmission systems more efficient, FACTS (Flexible AC Transmission System) devices have emerged as an alternative, giving greater flexibility to the transmission system which until recently was "inflexible" in respect to the invariability of its parameters. These devices may intervene not only in the capacity and control of transmission (improved facilities to import/export power), but also exert a significant influence on the dynamic and transitional performance of EPS [1].

This paper analyzes the performance of GUPFC FACTS devices to improve stability related to small perturbations of EPS. For this, the Power Sensitivity Model (PSM) is used to represent the EPS [2], due to the ease of including new dynamic devices, as for example, the dynamic model of the control structure of the GUPFC, EPS controllers (power system stabilizers – PSS) and the POD device. A power injection model was used to represent the GUPFC in the power flow, which is one of the contributions of this work. As will be discussed in more detail, both the proposed power injection model of the GUPFC and the control system structure gave positive results when applied in one multimachine test system. Analyzes of the results obtained will be made during the course of this work.

GUPFC power injection model

This section presents a model of the GUPFC power injection. For this, Fig. 1 shows a GUPFC device connected between three buses (i, j and k) of the EPS.

In Fig. 1 the three voltage source converters (VSCs) are based on GTOs (Gate Turn-Off Thyristors) and have identical configurations as well as operating principles, but their functions differ by the way that they are connected to the EPS [3]. VSCs are connected to the AC system via coupling transformers which are connected to each other via a common DC link [4]. As shown in Fig. 2, the converters in series, VSC2 and VSC3, are represented by two

* Corresponding author.
E-mail address: danilodovalle@gmail.com (D.B. Valle).

http://dx.doi.org/10.1016/j.ijepes.2014.10.012
0142-0615/© 2014 Elsevier Ltd. All rights reserved.

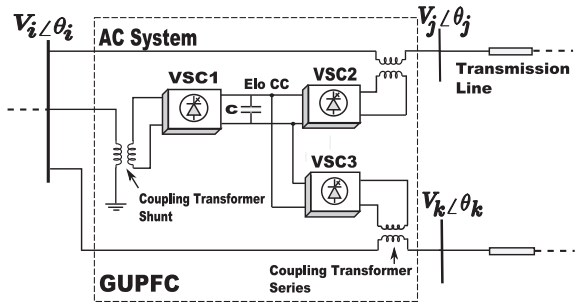

Fig. 1. Diagram of the GUPFC device with three converters.

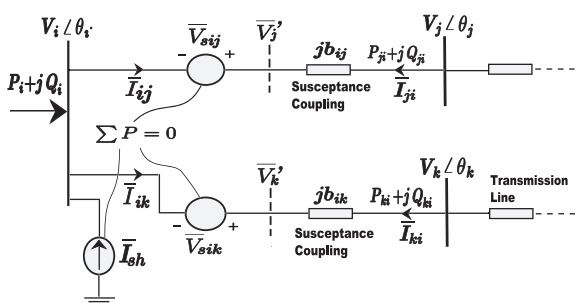

Fig. 2. Schematic representation of a three-converter GUPFC.

controllable synchronous voltage sources $\overline{V}_{sin}$ (with $n = j, k$) in series with their respective susceptances (jb_{in}) representing the coupling transformers. The converter VSC1 is electrically represented by an ideal current source, which is connected in shunt to the common bus i of the GUPFC installation. Also in Fig. 2, $\overline{V}'_{in}$ are two fictitious buses used in the deduction of the model. P_i and Q_i are the active and reactive power injections at bus i of the installation. P_{nj} and Q_{nj} are conventional active and reactive power flows that circulate in the i–n branches, leaving the n buses (with $n = j, k$), respectively.

The control of the active and reactive power flows in transmission lines by the GUPFC device is achieved by controlling the magnitudes (r_{in}) and angles (γ_n) of the serial voltage sources ($\overline{V}_{sin}$), which are given by Eq. (1).

$$\overline{V}_{sin} = r_{in} e^{j\gamma_n} \overline{V}_i \tag{1}$$

In Eq. (1) the controllable range of relative magnitude (r_{in}) and angle (γ_n) of $\overline{V}_{sin}$ with the respective voltage of the common installation bus ($\overline{V}_i$) is $0 < r_{in} < r_{inmax}$ and $0 < \gamma_n < 2\pi$, respectively, where $n = j, k$ [5]. Based on the phasor diagram of the Unified Power Flow Controller (UPFC) presented in [6] and reproduced in Fig. 3, the voltage sources $\overline{V}_{sin}$ (Eq. (1)) can be decomposed into two components, one component in quadrature (V_{pn}) and the other component in series (V_{qn}) with the currents $\overline{I}_{in}$ crossing branches i–n (with $n = j, k$). These two components are represented by Eqs. (2) and (3).

$$V_{pn} = r_{in} V_i \sin(\gamma_n) \tag{2}$$

$$V_{qn} = r_{in} V_i \cos(\gamma_n) \tag{3}$$

For the GUPFC power injection model, the ideal current shunt source ($\overline{I}_{sh}$) shown in Fig. 2 is also decomposed into two components, one being in-phase (i_p) and the other in quadrature (i_q) with the common installation voltage ($\overline{V}_i$) being described by Eq. (4) and shown in Fig 3.

$$\overline{I}_{sh} = (i_p - j i_q) e^{j\theta_i} \tag{4}$$

As shown in [7] and illustrated in Fig. 2, a constraint that must be satisfied for the correct operation of the GUPFC in the EPS is related to the exchange of active power between converters. This restriction (called the GUPFC invariance active power) establishes that when losses are disregarded, all the active power supplied by the shunt converter (P_{sh}) must be exactly equal to the power delivered to the AC system by the serial converters (P_{se}) of the GUPFC, that is:

$$P_{sh} = -\sum_{m=i,j,k} P_{se,m} \tag{5}$$

From the circuit equivalent to the GUPFC shown in Fig. 2, and considering the restriction shown in Eq. (5) together with Eqs. (2)–(4), one arrives at the power injection model of this device (Eqs. (6)–(9)). This represents the contributions of both the controllable synchronous voltage sources (serial converters) and the ideal current source (shunt converter) of the GUPFC.

$$P_{s,i} = -\sum_{n=j,k} V_n b_{in} [V_{pn} \cos(\theta_{in}) + V_{qn} \sin(\theta_{in})] \tag{6}$$

$$Q_{s,i} = -V_i \sum_{n=j,k} b_{in} V_n - V_i i_q \tag{7}$$

$$P_{s,n} = V_n b_{in} [V_{pn} \cos(\theta_{in}) + V_{qn} \sin(\theta_{in})] \tag{8}$$

$$Q_{s,n} = V_n b_{in} [V_{qn} \cos(\theta_{in}) - V_{pn} \sin(\theta_{in})] \tag{9}$$

In Eqs. (6)–(9), $n = j, k$, $\theta_{in} = (\theta_i - \theta_n)$ and $b_{in} = (-1/X_{in})$, with X_{in} being the reactance of the coupling transformer. $P_{s,i}$ and $Q_{s,i}$ are the active and reactive power injections at common bus i of the installation. $P_{s,n}$ and $Q_{s,n}$ are the active and reactive power injections in buses j and k of the installation, respectively. Although the GUPFC power injection model presented in Eqs. (6)–(9) is based on the model presented in [7,8], the model described herein has an added advantage because it is independent of the r_{in} and γ_n parameters, thereby eliminating a need for them to be calculated. Fig. 4 illustrates the GUPFC device represented by its power injection model ($P_{s,i}$, $Q_{s,i}$, $P_{s,n}$, $Q_{s,n}$) and also the active and reactive power flows which will be

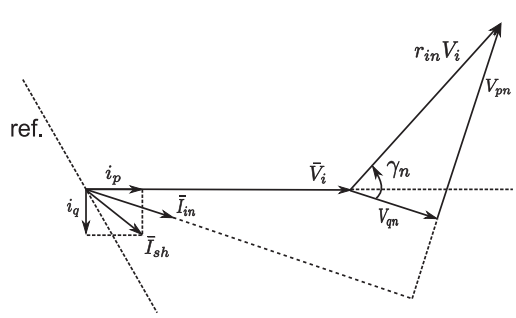

Fig. 3. Phasor diagram of UPFC.

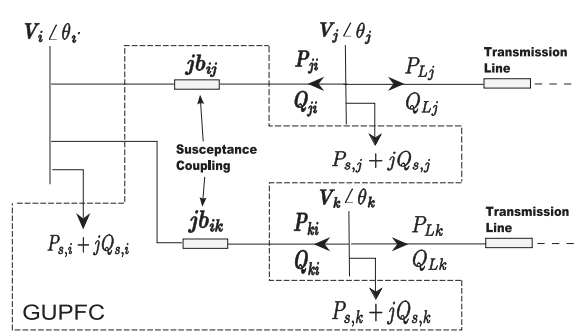

Fig. 4. Flow control by the GUPFC.

دریافت فوری ← متن کامل مقاله

ISIArticles
مرجع مقالات تخصصی ایران

- ✓ امکان دانلود نسخه تمام متن مقالات انگلیسی
- ✓ امکان دانلود نسخه ترجمه شده مقالات
- ✓ پذیرش سفارش ترجمه تخصصی
- ✓ امکان جستجو در آرشیو جامعی از صدها موضوع و هزاران مقاله
- ✓ امکان دانلود رایگان ۲ صفحه اول هر مقاله
- ✓ امکان پرداخت اینترنتی با کلیه کارت های عضو شتاب
- ✓ دانلود فوری مقاله پس از پرداخت آنلاین
- ✓ پشتیبانی کامل خرید با بهره مندی از سیستم هوشمند رهگیری سفارشات