Electrical Power and Energy Systems 58 (2014) 64–74

Contents lists available at ScienceDirect

Electrical Power and Energy Systems

journal homepage: www.elsevier.com/locate/ijepes

Small signal stability analysis of power systems with DFIG based wind power penetration

Bhinal Mehta [a], Praghnesh Bhatt [a,*], Vivek Pandya [b]

[a] Department of Electrical Engineering, C.S. Patel Institute of Technology, CHARUSAT, Changa, Gujarat, India
[b] Department of Electrical Engineering, School of Technology, PDPU, Gandhinagar, Gujarat, India

ARTICLE INFO

Article history:
Received 12 April 2013
Received in revised form 6 December 2013
Accepted 2 January 2014

Keywords:
Doubly fed induction generator
Power system oscillations
Eigenvalue analysis
Wind turbine generators

ABSTRACT

With the increasing penetration of wind power generation into the power system, it is required to comprehensively analyze its impact on power system stability. The present paper analyzes the impact of wind power penetration by doubly fed induction generator (DFIG) on power system oscillations for two-area interconnected power system. The aspects of inter-area oscillations which may affect the operation and behaviour of the power systems are analyzed with and without the wind power penetration. Eigenvalue analysis is carried out to investigate the small signal behaviour of the test system and the participation factors have been determined to identify the participation of the states in the variation of different mode shapes. The penetration of DFIG in a test system results in an oscillatory instability, which can be stabilized with the coordinated operation of automatic voltage regulator (AVR) and power system stabilizer (PSS) equipped on synchronous generators. Also, the variations in oscillatory modes are presented to observe the damping performance of the test system at different wind power penetration level.
© 2014 Elsevier Ltd. All rights reserved.

1. Introduction

The electricity industry worldwide is turning increasingly to renewable sources of energy to generate electricity. Wind is the fastest growing and the most widely utilized emerging renewable energy technology for power generation at present, with a total of approximately 250 GW installed worldwide up to 2012 [1].

The wind turbine generators (WTGs) are divided into two basic categories: fixed speed and variable speed. A fixed-speed WTG generally uses a squirrel-cage induction generator (SCIG) to convert the mechanical energy from the wind turbine into electrical energy. DFIG and direct drive synchronous generator (DDSG) are popular types of variable speed WTGs. Variable-speed WTGs can offer increased efficiency in capturing the energy from wind over a wider range of wind speeds, along with better power quality and with the ability to regulate the power factor, by either consuming or producing reactive power. In the DFIG, the rotor is connected to the power system through the back-to-back ac/dc/ac converter, while the stator is connected directly to the power system. The control scheme of DFIG decouples the rotational speed of rotor from the grid frequency [2,3].

Modelling of DFIG for stability studies has lead to various models developed using different approaches presented in [4–8]. The influence of load increase, the length of transmission network interface and the different penetration levels of a constant speed wind turbine generator on power system oscillations is studied in [9] with the consideration of SCIG.

In [10], supplementary control strategy is designed for the DFIG power converters to mitigate the impact of reduced inertia due to significant DFIG penetration in a large power system. Small signal behaviour of DFIG in power factor control mode and voltage control mode were extensively analyzed in [11]. Improved controller tuning is proposed to damped inter area mode oscillations. The impacts of DFIGs on the electromechanical modes are demonstrated to be highly dependent on their control strategies. The authors in [12,13] have reported the likelihood of the contribution of DFIGs to the system damping with application of appropriate coordinated tuning of controllers by evolutionary techniques. In [14], an approach of sensitivity analysis of electromechanical modes to the inertia of the generators is introduced and the results have shown both detrimental and beneficial impacts of increased DFIG penetration into the power system.

The dynamic behaviour of the DFIG has been investigated by various authors. The majority of these studies are to show the impact of DFIG on power system dynamics, the merits of decoupled control and maximum power tracking and the response to grid disturbances, the fault ride through behaviour, the control methods to make the DFIG behave like a synchronous generator [15–20]. The advanced control capabilities of DFIG are used in [21] to enhance network damping via an auxiliary power system stabilizer loop.

* Corresponding author. Mobile: +91 9427339896.
E-mail address: pragneshbhatt.ee@ecchanga.ac.in (P. Bhatt).

0142-0615/$ - see front matter © 2014 Elsevier Ltd. All rights reserved.
http://dx.doi.org/10.1016/j.ijepes.2014.01.005

The literature survey shows that the small signal stability analysis with the integration of wind power generation has been addressed for single machine infinite bus system (SMIB) whereas the less attention has been paid for multi machine system which are equipped with AVR and PSS on synchronous machines. The modes of response introduced by DFIG in interconnected power systems, as well as the effect of increased penetration of DFIG on inter area oscillations considering two-area power system have been investigated in the present paper. The influence on modes with the displacement of synchronous generators equipped with or without AVR and PSS are shown. Further, the effects of placement of DFIG at different locations and stepwise penetration of wind power on small signal stability are analyzed in the present work.

The paper is organized in six sections. Section 2 presents the characteristics and modelling concepts associated with DFIGs. The small signal stability and eigenvalue analysis has been discussed in Section 3. Section 4 details the approach developed to analyze the impact of increased penetration of DFIGs on small signal and transient stability along with case description. Simulation and results with different cases are presented and discussed in Section 5 followed by the conclusion in Section 6.

2. Characteristic and modelling of DFIG

2.1. Electrical dynamics

The schematic of DFIG interfaced with electrical grid is shown in Fig. 1. The stator and rotor flux dynamics of induction machine are assumed to be fast in comparison with grid dynamics and the converter controllers decouple the generator rotational speed from the grid. As a result, steady-state electrical equations of DFIG can be represented by (1)–(4) [22–25].

$$v_{ds} = -R_s i_{ds} + ((X_s + X_m) i_{qs} + X_m i_{qr}) \tag{1}$$

$$v_{qs} = -R_s i_{qs} - ((X_s + X_m) i_{ds} + X_m i_{dr}) \tag{2}$$

$$v_{dr} = -R_r i_{dr} + (1 - \omega_m)((X_r + X_m) i_{qr} + X_m i_{qs}) \tag{3}$$

$$v_{qr} = -R_r i_{qr} - (1 - \omega_m)((X_r + X_m) i_{dr} + X_m i_{ds}) \tag{4}$$

where v_{ds} and v_{qs} are d- and q-axis stator voltages, respectively, v_{dr} and v_{qr} are d- and q-axis rotor voltages, respectively, i_{ds} and i_{qs} are d- and q-axis stator currents, respectively, i_{dr} and i_{qr} are d- and q-axis rotor currents respectively, R_S is stator resistance, R_r is rotor resistance, X_s is stator reactance, X_m is magnetization reactance, X_r is rotor reactance and ω_m is the rotor speed.

2.2. Power dynamics

The power injected in the grid depends on the operating mode of the converter and it is also a function of stator and rotor currents. Hence, the converter powers on the grid side and rotor side are represented by (5)–(6) and (7)–(8), respectively.

The converter powers on grid side:

$$P_g = v_{dg} i_{dg} + v_{qg} i_{qg} \tag{5}$$

$$Q_g = v_{qg} i_{dg} - v_{dg} i_{qg} \tag{6}$$

The converter powers on rotor side:

$$P_r = v_{dr} i_{dr} + v_{qr} i_{qr} \tag{7}$$

$$Q_r = v_{qr} i_{dr} - v_{dr} i_{qr} \tag{8}$$

where v_{dg} and v_{qg} are d- and q-axis voltages of the grid side convertor respectively, i_{dg} and i_{qg} are d- and q-axis current of the grid side convertor, respectively.

2.3. Wind turbine dynamics

In stability studies of DFIG wind turbine, the model of drive train is important. It is assumed that the convertor controls are able to filter shaft dynamics and therefore the generator motion equations, which represent mechanical dynamics of wind turbine, are as follows:

$$\dot{\omega}_m = (T_m - T_e)/2H_m \tag{9}$$

$$T_e = X_m (i_{qr} i_{ds} - i_{dr} i_{qs}) \tag{10}$$

where T_e is electromagnetic torque and is approximated as follows:

$$T_e \approx -\frac{X_m V i_{qr}}{\omega_b (X_s + X_m)} \tag{11}$$

where ω_b is the system frequency rate in rad/s, H_m is inetia constants in kW s/kV A. The mechanical torque T_m which is the power input of the wind turbine is as follows:

$$T_m = \frac{P_w}{\omega_m} \tag{12}$$

where P_w the mechanical power extracted from the wind and is as follows:

$$P_w = \frac{\rho}{2} c_p(\lambda, \theta_p) A_r v_w^3 \tag{13}$$

where ρ is the air density, v_w is the wind speed, θ_p is the pitch angle, A_r is the area swept by the rotor and λ is the blade tip speed ratio.

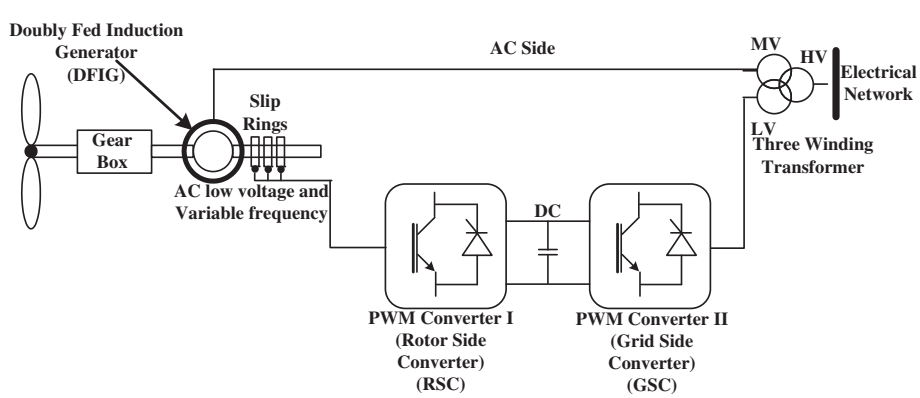

Fig. 1. Schematic of DFIG integrated with electrical grid.

دریافت فوری ← متن کامل مقاله

ISIArticles
مرجع مقالات تخصصی ایران

- ✓ امکان دانلود نسخه تمام متن مقالات انگلیسی
- ✓ امکان دانلود نسخه ترجمه شده مقالات
- ✓ پذیرش سفارش ترجمه تخصصی
- ✓ امکان جستجو در آرشیو جامعی از صدها موضوع و هزاران مقاله
- ✓ امکان دانلود رایگان ۲ صفحه اول هر مقاله
- ✓ امکان پرداخت اینترنتی با کلیه کارت های عضو شتاب
- ✓ دانلود فوری مقاله پس از پرداخت آنلاین
- ✓ پشتیبانی کامل خرید با بهره مندی از سیستم هوشمند رهگیری سفارشات