Physical Communication 19 (2016) 61–69

Contents lists available at ScienceDirect

Physical Communication

journal homepage: www.elsevier.com/locate/phycom

Full length article

Full-duplex communication for future wireless networks: Dynamic resource block allocation approach

Chandan Pradhan *, Garimella Rama Murthy

Signal Processing and Communication Research Center, International Institute of Information Technology, Hyderabad, India

ARTICLE INFO

Article history:
Received 14 June 2015
Received in revised form 28 March 2016
Accepted 30 March 2016
Available online 13 April 2016

Keywords:
Full-duplex
CCI
Mobility
DRBA
QoS

ABSTRACT

In this paper, we discuss a full-duplex (FD) communication scenario, where multiple FD user equipments (UEs) share same spectrum resources (or resource blocks) simultaneously. The FD eNodeB deploys digital precoding and successive interference cancellation with optimal ordering algorithm, to allow coexistence of multiple UEs in downlink and uplink, respectively. The sharing of same resource blocks, results in co-channel interference (CCI), in downlink of a UE, from uplink signals of other UEs. To mitigate the interference, a smart antenna approach is adopted. The approach includes using multiple antennas at UEs to form directed beams towards eNodeB and nulls towards other UEs. However, the approach fails when the UEs due to their mobility align themselves in the same direction with respect to the eNodeB (eNB). In this paper, we propose a dynamic resource block allocation (DRBA) algorithm for avoiding CCI due to mobility of UEs, sharing the spectrum resource, in a FD communication scenario. The proposed algorithm shows significant improvement of the quality of service (QoS) of the communication links.

© 2016 Elsevier B.V. All rights reserved.

1. Introduction

The Wireless World Research Forum (WWRF) predicted that 7 trillion wireless devices will serve 7 billion people worldwide by 2017 [1]. The explosion in the number of mobile users has resulted in the depletion of limited spectrum resource. With 4G getting deployed or soon to be deployed in many countries, this problem of spectrum crisis can prove to be a bottleneck. To address this issue, research has already begun on 5G, which is expected to get deployed beyond 2020 [1,2]. One of the major revolutions in the future wireless networks can be the introduction of full-duplex (FD) eNodeB (eNB) and user equipment (UE). The FD operation has the capability of cutting down the spectrum requirement by half.

In recent years, excessive work is being done in the area of self-interference cancellation (SIC) design for both single and multiple antenna transceiver units [3–16]. Most of the recent research on FD communication considers a FD eNB and multiple half-duplex (HD) UEs [15–18]. The computational complexity of SIC circuitry limits the use of FD UEs. However, the SIC designs proposed in [8–10,15], have the capability of eradicating this limitation. Using these SIC techniques, simultaneous transmission and reception on the same spectrum resource is possible using a single antenna, as opposed to using two antennas. The design works for large bandwidths and high data rates.

In [8–10], a novel analog and digital cancellation technique cancels the self-interference and causes it to go below the receiver noise floor, and therefore ensure that there is no degradation to the received signal. The SIC design is successfully tested using a multiple antenna Wi-Fi with transmission power ranging from 16 dBm to 20 dBm and bandwidth of 20 MHz. In [14], two SIC designs are proposed, which allow its integration to compact radios. The first design combines a dual polarized antenna with a self-tunable cancellation circuit and targets devices like small-cell base stations and tablet computers. In the second

* Corresponding author.
E-mail addresses: chandan.pradhan@research.iiit.ac.in (C. Pradhan), rammurthy@iiit.ac.in (G.R. Murthy).

http://dx.doi.org/10.1016/j.phycom.2016.03.002
1874-4907/© 2016 Elsevier B.V. All rights reserved.

design a tunable electrical balance isolator/duplexer is combined with a single-port miniature antenna. The balance circuit can be implemented in a CMOS technology, facilitating low cost and dense integration. Hence, this can be integrated in device like smartphones sensor nodes. The two designs are shown to provide a 75 dB and 50 dB of isolation at 2.45 GHz over a signal bandwidth of 10 MHz and 6 MHz, respectively. The performance can further be increased by incorporating digital cancellation.

Here, we consider FD eNB and multiple FD UEs and assume perfect self-interference cancellation at the transceiver circuits. While this is far from true today, sufficient progress is being made in this direction to start considering this model and its implications, especially in case of small cells, where the transmission power and range are small enough to deploy the current state of art SIC circuitry in the transceivers. This is a positive indicator for future of FD in cellular networks.

In a conventional LTE system, UEs are allocated spectrum resources according to channel state scheduling algorithms [19–21]. Recently, much research has been done to develop spectrum and power allocation algorithms for FD systems [15–18,22]. In these works, the eNB has the capability to operate in FD mode. In [16], a scheduler is introduced which aims to maximize the logarithmic sum of the average rates of all the HD UEs in both uplink and downlink. The UEs either operate in HD mode or in pairs, one each in uplink and downlink directions, for FD mode depending on the operating conditions. In [17], pairs of HD UEs are formed for FD operation and spectrum resources are allocated so as to maximize the sum-rate of the system. Each subcarrier is allocated to just one transceiver. The problem is solved using matching theorem. In [18], the authors address joint subcarrier and power allocation to the set of HD uplink and downlink UEs using a suboptimal iterative algorithm based on the Frank–Wolfe approach. In [22], resource allocation is considered for a system consisting of FD eNB communicating with FD UEs. The UEs are allocated exclusive subcarriers used for downlink and uplink communications to avoid the inter-user interference. The joint radio resource allocation problem for uplink and downlink channels is addressed with the objective of sum-rate maximization. For this, an iterative algorithm is proposed based on game theory by modeling the problem as a non-cooperative game between the uplink and downlink channels.

In our work, we consider FD UEs which leverage the use of same spectrum resources for uplink and downlink simultaneously, similar to the system discussed in [22]. However, unlike in [22], the same subcarriers are shared among multiple spatially uncorrelated UEs. The use of same spectrum resources results in co-channel interference (CCI) in downlink of UEs from uplink of other UEs. To eliminate the CCI, we have implemented a smart antenna approach using multiple antenna at UEs to create a directed beam towards eNB and nulls towards interfering UEs in [23]. The use of the smart antenna technique to eliminate CCI will allow the allocation of available resource blocks (RBs) to all the spatially uncorrelated UEs. Hence, this simplifies the implementation of the algorithm discussed in [22], along with significantly improving the spectrum efficiency. Also in a practical scenario, when the UEs are mobile, the use of smart antennas will allow them to continuously adapt their beam pattern using beam steering algorithm like constrained least mean square algorithm [24–30]. However, the smart antenna technique fails to mitigate co-channel interference when the UEs, due to their mobility, align in the same direction with respect to the eNB. To tackle this problem, we here propose a cognitive radio technology based algorithm: Dynamic Resource Block Allocation (DRBA).

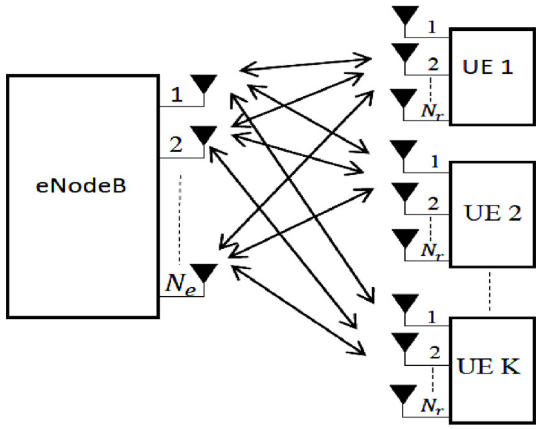

Fig. 1. Multiuser full-duplex system model.

The work presented here addresses the full-duplex communication in a small cell from a generic point of view. In the future work, the full-duplex technology in small cells deploying millimeter-wave (mmW) for communication will be studied. The small cell systems are considered suitable due to low transmit power, short distances and low mobility [31–34]. In [33], the gain for small cell FD transmission compared to the conventional HD system in a small cell scenario is analyzed. The mmW allows easy deployment of multiple antennas in the eNB and even in the UE due to small antenna size requirement [32–34]. Also the use of large chunks of underutilized spectrum in the mmW bands has gained significant interest in meeting the capacity requirement of the future cellular networks. Specifically [33] considers the 28 GHz and 73 GHz bands to be initial frequencies where mmW cellular systems could operate. In many dense urban areas, cell sizes are now often less than 100 m to 200 m in radius, possibly within the range of mmW signals based on measurements in [32,33].

The paper is divided into five sections. The system model describing the eNB and the UE transceiver design for the proposed method is analyzed in Section 2. The DRBA algorithm for mitigating the possible CCI due to mobility of UEs is described in Section 3. The simulation results showing the utility of DRBA algorithm are discussed in Section 4. Finally, the conclusion is presented in Section 5.

2. System model

In this work, we consider a single cell deploying an FD eNB with N_e antennas and K FD UEs with N_r antennas operating in an FD mode (Fig. 1). In the proposed architecture shown in Figs. 2 and 3 for eNB and UE

دریافت فوری ← متن کامل مقاله

ISIArticles
مرجع مقالات تخصصی ایران

- ✓ امکان دانلود نسخه تمام متن مقالات انگلیسی
- ✓ امکان دانلود نسخه ترجمه شده مقالات
- ✓ پذیرش سفارش ترجمه تخصصی
- ✓ امکان جستجو در آرشیو جامعی از صدها موضوع و هزاران مقاله
- ✓ امکان دانلود رایگان ۲ صفحه اول هر مقاله
- ✓ امکان پرداخت اینترنتی با کلیه کارت های عضو شتاب
- ✓ دانلود فوری مقاله پس از پرداخت آنلاین
- ✓ پشتیبانی کامل خرید با بهره مندی از سیستم هوشمند رهگیری سفارشات