Applied Thermal Engineering 48 (2012) 367–377

Contents lists available at SciVerse ScienceDirect

Applied Thermal Engineering

journal homepage: www.elsevier.com/locate/apthermeng

Minimization of the LCA impact of thermodynamic cycles using a combined simulation-optimization approach

Robert Brunet [a], Daniel Cortés [a], Gonzalo Guillén-Gosálbez [a,*], Laureano Jiménez [a], Dieter Boer [b]

[a] Departament d'Enginyeria Quimica, Escola Tecnica Superior d'Enginyeria Quimica, Universitat Rovira i Virgili, Campus Sescelades, Avinguda Paisos Catalans 26, 43007 Tarragona, Spain

[b] Departament d'Enginyeria Mecanica, Escola Tecnica Superior d'Enginyeria, Universitat Rovira i Virgili, Campus Sescelades, Avinguda Paisos Catalans 26, 43007, Tarragona, Spain

ARTICLE INFO

Article history:
Received 15 November 2011
Accepted 13 April 2012
Available online 26 April 2012

Keywords:
Process simulation
Optimization
Rankine cycle
Absorption cycle
Cost analysis
Life cycle assessment

ABSTRACT

This work presents a computational approach for the simultaneous minimization of the total cost and environmental impact of thermodynamic cycles. Our method combines process simulation, multi-objective optimization and life cycle assessment (LCA) within a unified framework that identifies in a systematic manner optimal design and operating conditions according to several economic and LCA impacts. Our approach takes advantages of the complementary strengths of process simulation (in which mass, energy balances and thermodynamic calculations are implemented in an easy manner) and rigorous deterministic optimization tools. We demonstrate the capabilities of this strategy by means of two case studies in which we address the design of a 10 MW Rankine cycle modeled in Aspen Hysys, and a 90 kW ammonia-water absorption cooling cycle implemented in Aspen Plus. Numerical results show that it is possible to achieve environmental and cost savings using our rigorous approach.

© 2012 Elsevier Ltd. All rights reserved.

1. Introduction

The energetic and economic analysis of industrial processes has gained wider interest in recent years. This has been motivated by the need to use the resources available nowadays more efficiently. In this context, process optimization has emerged as an effective tool for reducing energy consumption and improving efficiency in process industries. Multi-objective optimization (MOO), in particular, offers decision makers a suitable framework to identify the set of operating conditions and design variables that simultaneously improve the economic and environmental performance of a system [1].

Thermodynamic cycles are widely used in energy conversion processes. They are often found in daily life, but have the drawback of requiring large amounts of energy to operate. By optimizing power generation cycles, (e.g Rankine cycle) it is possible to increase their efficiency and reduce the associated global warming emissions [2]. Cooling cycles can also benefit from the application of rigorous optimization tools. Increments of up to 50% in their coefficient of performance (COP) have been reported [3], which leads to significant savings in primary energy sources [4].

A variety of optimization approaches have been applied to thermodynamic cycles. Some studies in power cycles focus on the minimization of a single indicator, such as the net present value (NPV), total plant cost (TPC) [5,6], and cycle efficiency [7–10]. In cooling cycles, some models were devised to optimize the COP and cooling load [3]. The application of MOO to thermodynamic cycles, however, has been quite scarce. The simultaneous optimization of the exergetic efficiency and the TPC in power generation systems was studied by Becerra–Lopez and Golding [11] and Dipama et al. [2]. Pelet et al. [12] optimized a superstructure of energy systems considering the cost and CO_2 emissions. In the context of cooling cycles, Gebreslassie et al. [13,14] proposed a multi-objective non-linear programming (moNLP) problem for the design of an ammonia-water absorption cycle considering the cost and life cycle assessment (LCA) performance [15,16].

The overwhelming majority of the works mentioned above follow the so called simultaneous approach, which relies on formulating algebraic optimization models described in an explicit form. For simplicity, most of these formulations contain short-cut models that avoid the numerical difficulties associated with handling non-linear equations. These simplified formulations provide "good" approximations when certain assumptions hold,

* Corresponding author. Tel.: +34 977558618.
E-mail address: gonzalo.guillen@urv.cat (G. Guillén-Gosálbez).

1359-4311/$ – see front matter © 2012 Elsevier Ltd. All rights reserved.
doi:10.1016/j.applthermaleng.2012.04.032

but can lead to large numerical errors otherwise. Sequential process simulation models are more difficult to optimize due to the presence of non-convexities of different types, but have the advantage of producing more accurate results. Another limitation of the works mentioned above is that those that account for environmental concerns restrict the analysis to a single environmental indicator, neglecting the effects caused in other environmental damages.

This work applies a combined approach for the design of thermodynamic cycles that takes advantage of the complementary strengths of sequential modular process simulators (e.g. Aspen Hysys and Aspen Plus), optimization tools (e.g. SNOPT and CPLEX) and LCA. The pivotal idea of our method is to optimize modular simulation models of thermodynamic cycles using an external deterministic optimizer that is guaranteed to converge to an optimal solution. Our approach is inspired by other simulation-optimization methods used in a variety of chemical engineering applications, including the design of systems such as: heat exchangers and chemical reactions [17–19], chemical plants [20,21], distillation columns [22], and biotechnological processes [23]. An efficient solution method is presented for tackling these problems based on decomposing them into two sub-levels between which an algorithm iterates until a stopping criterion is satisfied. This algorithm performs the calculations using both a process simulation and an external optimizer.

The final goal of our analysis is to identify the design and operating conditions of different thermodynamic cycles that simultaneously minimize the total annualized cost (TAC) and environmental impact (EI). We demonstrate the capabilities of this methodology through its application to the design of two cycles: a steam Rankine cycle and an ammonia-water absorption cycle. The optimization of the steam Rankine cycle is formulated as a moNLP problem, which is optimized with a Successive Quadratic Programming (SQP) solver that interacts at each iteration with the process simulator of choice. The optimization of the absorption cycle gives rise to a multi-objective mixed-integer non-linear programming (moMINLP) problem, in which binary variables are employed to model the number of trays in the desorber.

2. Problem statement

As previously mentioned, we will focus herein on two energy conversion cycles: a steam Rankine cycle for power generation and an ammonia-water absorption cooling cycle. Note, however, that the approach presented is general enough to be adapted to any other energy system. We provide next a brief description of each of these systems before immersion into a detailed mathematical formulation.

2.1. Rankine cycle

We consider a reheat-regenerative power cycle with one closed and one open feedwater heater (see Fig. 1). The system contains one boiler, one turbine, a condenser, two pumps, and two shell-tube heat exchangers. Water is used as working fluid in the cycle. The boiler is assumed to operate with natural gas. The combustion gases behave as air. For the condenser as well as the heat exchangers, we use shell-tube heat exchangers.

2.2. Absorption cycle

We consider the single effect ammonia-water absorption cooling cycle described by Gebreslassie et al. [13,14] (see Fig. 2). The absorption cycle provides chilled water at 5 °C. The equipment units are the absorber (A), condenser (C), rectification column (RC), evaporator (E), subcooler (SC), refrigerant expansion valve (VLV1), solution heat exchanger (SHX), solution pump (P), and solution expansion valve (VLV2). It is assumed that the system works under steady state conditions. Heat and pressure losses are neglected. Adiabatic valves are considered. The refrigerant leaves the condenser, absorber and bottom of the generator as saturated liquid.

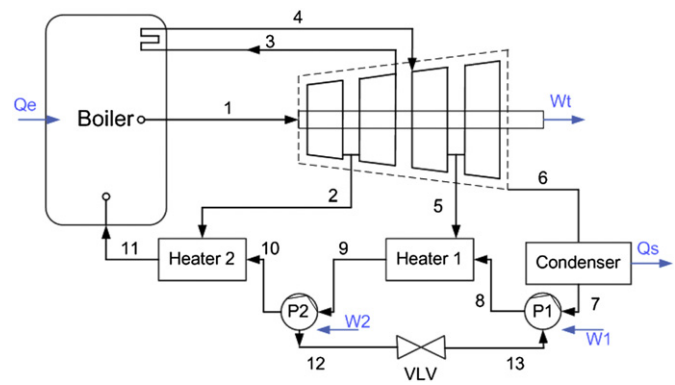

Fig. 1. Steam Rankine cycle.

2.3. Problem definition

The problems can be formally stated as follows. In the case of the Rankine cycle, we are given the flowsheet arrangement, net power yield, turbines and pumps efficiencies, overall heat transfer coefficients, thermodynamic properties, cost estimation correlations, economic parameters and environmental indicators. For the absorption cycle, we need to specify as well the cooling capacity, and inlet and outlet temperatures of the external fluids.

The goal of our study is to identify the optimal design and operating conditions that simultaneously minimize the TAC and the following damage impact indicators: damage to human health (HH), damage to ecosystem quality (EQ) and depletion of resources (DR).

3. Methodology

This section describes the approach proposed to tackle the problems described above. A general mathematical formulation is first presented. We then describe how the economic and environmental objective functions are calculated. The solution procedure and the computer implementation are finally discussed.

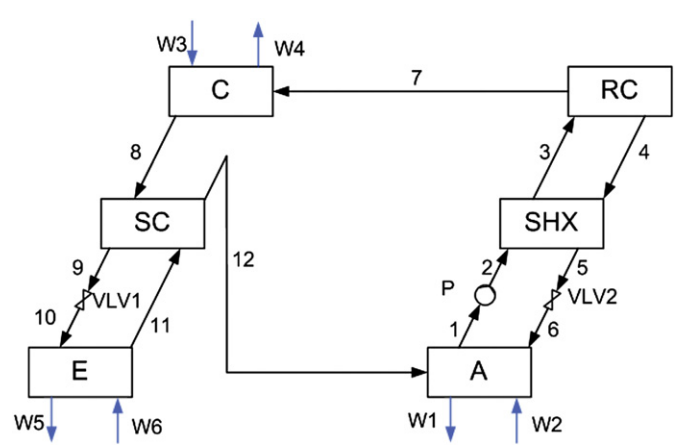

Fig. 2. Ammonia-water absorption cycle.

دریافت فوری ← متن کامل مقاله

ISIArticles
مرجع مقالات تخصصی ایران

- ✓ امکان دانلود نسخه تمام متن مقالات انگلیسی
- ✓ امکان دانلود نسخه ترجمه شده مقالات
- ✓ پذیرش سفارش ترجمه تخصصی
- ✓ امکان جستجو در آرشیو جامعی از صدها موضوع و هزاران مقاله
- ✓ امکان دانلود رایگان ۲ صفحه اول هر مقاله
- ✓ امکان پرداخت اینترنتی با کلیه کارت های عضو شتاب
- ✓ دانلود فوری مقاله پس از پرداخت آنلاین
- ✓ پشتیبانی کامل خرید با بهره مندی از سیستم هوشمند رهگیری سفارشات