Available online at www.sciencedirect.com

ScienceDirect

Procedia Engineering 199 (2017) 2687–2692

Procedia Engineering

www.elsevier.com/locate/procedia

X International Conference on Structural Dynamics, EURODYN 2017

Considering Low Frequency Sound Propagation in Bridge Design

Chul-Woo Kim[a*], Shun Kohdera[a], Kazuyuki Ono[b], Shinya Kimura[b], Mitsuo Kawatani[c]

[a]*Department of Civil and Earth Resources Engineering, Kyoto University, Kyoto 615-8540, Japan*
[b]*Eight-Japan Engineering Consultant, Osaka 532-0034 Japan*
[c]*Department of Civil Engineering, Kobe University, Kobe 657-8501, Japan*

Abstract

This paper investigates low frequency sounds radiated from a two-span continuous steel box girder bridge, three-span continuous steel plate girder bridge and three-span continuous prestressed concrete bridge. Those three bridges were selected as candidate bridges crossing a rural town. Velocity responses of bridges are estimated by a three-dimensional traffic-induced bridge vibration analysis, and those velocity responses are used in the frequency-domain sound propagation analysis by means of boundary element method. The propagation of sound pressure in the time-domain was also investigated. The inverse fast Fourier transformation was used to convert the sound pressure in the frequency-domain to the sound pressure at any point around the bridges in the time-domain. The analytical study showed that the lowest sound pressure level among three bridges was observed at the two-span continuous steel box girder bridge demonstrated.

Peer-review under responsibility of the organizing committee of EURODYN 2017.

Keywords: Boundary element method; Highway bridge; Low frequency noise; Velocity response; Sound propagation analysis.

1. Introduction

Sound radiated from engines and tires of heavy vehicles is regarded as one of the typical environmental vibrations of bridges [1]. The ground vibration is another major environmental vibration of bridges [2]. Comparing with those two vibrations, the low frequency sound especially below 20 Hz radiated from highway bridges is treated as a minor environmental problem. However, the low frequency sound radiated from bridges under traffic has been one of the environmental problems especially in urban areas where viaducts are constructed even along the residential zone [3]. For highway bridges constructed in rural areas there also exists high possibility of complaints caused by the low frequency sound, since the residents in the rural area have not been exposed to the low frequency sound so that they might be more sensitive to the low frequency sound than those living in urban areas.

This paper investigates low frequency sounds radiated from three candidate bridges in a rural town. In other words this study considers the low frequency sound radiated from bridges as a factor in selection of bridge types.

* Corresponding author. Tel.: +81-75-383-3421; fax: +81-75-383-3420.
E-mail address: kim.chulwoo.5u@kyoto-u.ac.jp

1877-7058 © 2017 The Authors. Published by Elsevier Ltd.
Peer-review under responsibility of the organizing committee of EURODYN 2017.
10.1016/j.proeng.2017.09.554

Velocity responses of bridges were estimated by means of a three-dimensional traffic-induced bridge vibration analysis, and those velocity responses were used in the frequency-domain sound propagation analysis by means of boundary element method (BEM). The propagation of sound pressure in the time-domain was also investigated. The inverse fast Fourier transformation (IFFT) was used to convert the sound pressure in the frequency-domain to the sound pressure at any point around the bridges in the time-domain.

2. Traffic-induced vibration analysis of bridges

In a three-dimensional traffic-induced vibration analysis of bridges [4], bridges were modeled using beam elements and the elastomeric bearing was modeled as a linear spring. Rayleigh damping was adopted in the three-dimensional traffic-induced vibration analysis of bridges, and equations of motion for vehicles and bridge interactive system were solved by the Newmark-β method by assuming $\beta = 0.25$.

Examined highway bridges are two-span continuous steel box girder bridge, three-span continuous steel plate girder bridge and three-span continuous prestressed concrete (PC) T-girder bridge as shown in Fig. 1. Bridge lengths are 64.8 m + 64.8 m = 129.6 m for the two-span continuous bridge and 40.5 m+ 40.9 m + 48.2 m = 129.6 m for the three-span bridges. All the bridges have same width of 6.15 m. Girder depths are different between two-span and three-span continuous bridges: 3 m for the two-span continuous bridge and 2.4 m for the three-span continuous bridges. The observation point for the low frequency sound is located at 95 m in longitudinal direction from the entrance (from A1) of each bridge, 7.0 m from the center of bridges in the transverse direction and 1.5 m above the ground as shown in Fig. 2.

The vehicle was modeled as 8-DOF dynamic system considering bounce, pitching, rolling, axle hop, axle tramp and axle windup motions [4]. Properties of the vehicle are summarized in Table 1. In the traffic-induced vibration analysis of the bridges, the bridge surface roughness was simulated by means of the Monte-Carlo simulation based on the PSD curve identified from a Japanese highway bridge [4]. The roadway roughness was categorized as "Class A" according to the ISO estimate [5].

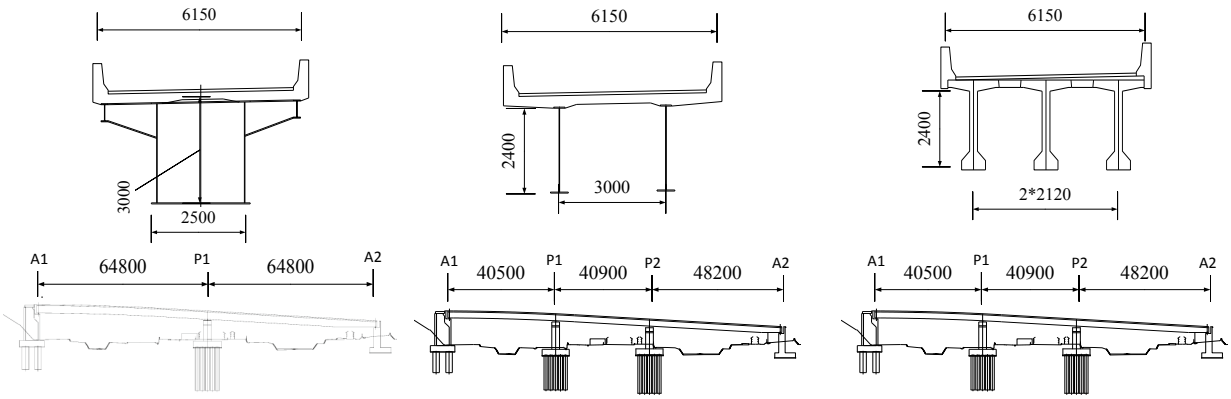

(a) Two-span continuous steel box girder (b) Three-span continuous steel plate girder (c) Three-span continuous PC concrete T-girder

Fig. 1. Observed bridges (unit: mm).

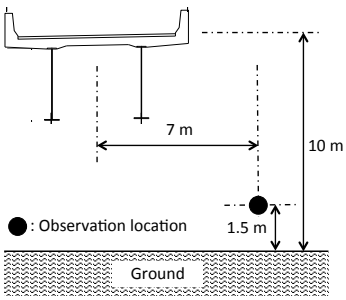

Fig. 2. Observation location for the low frequency sound.

Table 1. Vehicle properties.

Total weight (kN)		196.0
Axle weight (kN)	Front	49.0
	Rear	147.9
Damping ratio	Front	0.66
	Rear	0.33
Natural frequency: bounce motion (Hz)	Front	1.91
	Rear	3.2