Energy 72 (2014) 501–509

Contents lists available at ScienceDirect

Energy

journal homepage: www.elsevier.com/locate/energy

Hybrid-input power supply with PFC (power factor corrector) and MPPT (maximum power point tracking) features for battery charging and HB-LED driving

Chih-Lung Shen*, Yong-Xian Ko

Department of Electronic Engineering, National Kaohsiung First University of Science and Technology, No.1, University Rd., Yanchao Dist. Kaohsiung City 82445, Taiwan

ARTICLE INFO

Article history:
Received 16 February 2014
Received in revised form
18 April 2014
Accepted 17 May 2014
Available online 18 June 2014

Keywords:
Hybrid input
Power factor correction
PV power
Dual outputs

ABSTRACT

In this paper, a MSEBC (modified-SEPIC embedded-boost converter) is proposed, which can deal with either utility power or PV (photovoltaic) power to serve as HB-LED (High-Brightness Light-Emitting-Diode) driver and battery charger. While connected to utility, the proposed converter can perform PFC (power factor corrector) for universal line input. Once power failure occurs, it can draw energy from PV panel with MPPT (maximum power point tracking). Even if there is no utility power and PV energy, the MSEBC still can power on HB-LED from battery bank to achieve uninterruptable lighting feature. The topology of MSEBC is mainly derived from SEPIC-type converter as well as an embedded boost converter to develop a single-stage configuration, instead of multi-stage or two-stage type. Even though it only has single stage, both functions of HB-LED driving and battery charging still can be accomplished. In the MSEBC, a coupled inductor is adopted to replace the second inductor of traditional SEPIC and the chock of boost converter. A microprocessor-based controller is developed to accomplish all converter functions. A prototype, which have the functions of dealing with universal line input 85 ~ 265 V_{rms}, performing power factor correction, tracking maximum power for PV panel, lighting HB-LED, and charging/discharging battery, is carried out. Key measurements have verified the feasibility, functionality, and validity.

1. Introduction

AC-to-DC power supplies are wide used to electric vehicles, electric appliances, industry applications, and lighting system. Generally, they include a front-end diode rectifier, resulting in current harmonics and power pollution. Therefore, PFC (power factor corrector) is required to wave-shape the input current to be sinusoidal as well as to improve power factor. PFCs have two categories. One is passive PFC and the other is active PFC. Without the need of active switch and associated control circuit, passive PFC has the advantage of lower cost. However, it cannot achieve power factor as high as active one so that active PFC still is the major adoption in market products. Among active-PFC configurations, boost type attracts a great deal of interests owing to its high-power-factor ability and easy control [1–4]. The output voltage of a boost converter can be larger than input [5,6]. It pops up the necessary of a step-down stage cascaded between the PFC and a low-voltage load. That is, two-stage structure dominates low-voltage power supply.

In the literature [7,8], power processing through two stages will lower overall conversion efficiency. Some researchers pay attentions to single-stage configuration. Even though the single-stage converter derived from buck-boost topology resolves the problem that PFC steps up input voltage [9–13], reverse polarity at output port causes another issue. Flyback PFC can avoid the mentioned problem [14,15], nevertheless which exists the demerits of low efficiency and pulsating input current. SEPIC topology can be another selection [16,17], but the disadvantages of limited functions, single input, and unidirectional power follow processing will confine its applications.

Recently, the development regarding renewable energy and energy-saving lighting system attracts a lot of attentions. The system of a battery bank charged by PV arrays is presented in Refs. [18,19] but there is no the mechanism relating to battery discharge. In Refs. [20–24], the power supply systems, which can deal with PV (photovoltaic) power, battery energy, and HB-LED driving, are proposed. Nevertheless, their configurations are two-stage and incapable of drawing power from utility.

* Corresponding author. Tel.: +886 7 6011000; fax: +886 7 6011386.
E-mail address: clshen@nkfust.edu.tw (C.-L. Shen).

http://dx.doi.org/10.1016/j.energy.2014.05.072
0360-5442/

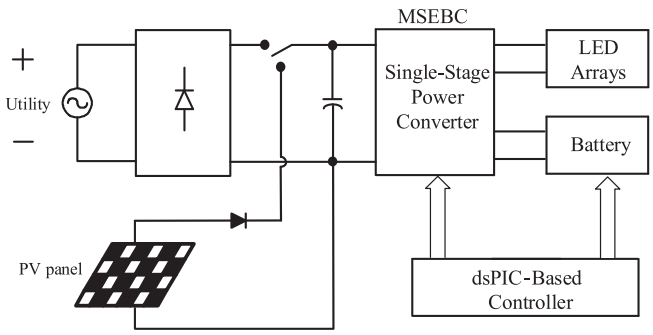

Fig. 1. A block diagram to illustrate the configuration of the proposed MSEBC.

This paper proposes a novel single-stage converter, which not only can deal with universal line input and PV power but accomplish the features of power factor correction, MPPT (maximum power point tracking), HB-LED driving, and battery charging/discharging. The proposed converter is derived from the integration of an SEPIC converter and a boost converter, so called MSEBC (modified-SEPIC embedded-boost converter). The input of MSEBC can be either universal line input or PV panel. While dealing with line input, the proposed converter corrects power factor. While drawing power from PV panel, the converter can fulfill MPPT. With respect to output, the converter has two output ports. One drives HB LEDs and the other performs battery charging simultaneously. In MSEBC, a coupled inductor is adopted to replace the second inductor of the SEPIC and the choke of the boost converter such as to reduce volume and to develop dual-output configuration. A prototype of MSEBC is designed, analyzed, simulated, and measured. Practical measurements have demonstrated the feasibility of the proposed converter.

2. Configuration of power stage

Fig. 1 shows a block diagram to represent the configuration of the proposed MSEBC. The converter is a single-stage structure, of which input terminal can be connected to either utility or PV panel. It has two output ports for powering HB-LED arrays and charging battery bank simultaneously. A dsPIC-based controller is developed to function all converter features. The corresponding circuitry of the main power stage is shown in Fig. 2. The input inductor L_1, active switch Q_1, capacitor C_1, diode D_5, and coupled inductor develop an SEPIC-type configuration, which have two output ports so as to drive HB LEDs and charge battery. The secondary of the coupled inductor, diode D_6, and active switch Q_2 form a boost-type converter to discharge battery energy for LED driving. The Q_3 serves as a relay. During the interval of battery discharging, the Q_3 is kept in on-state in order to loop a discharging path.

The MSEBC has three operation modes: utility mode, PV mode, and discharging mode. In utility mode, a conceptual diagram to

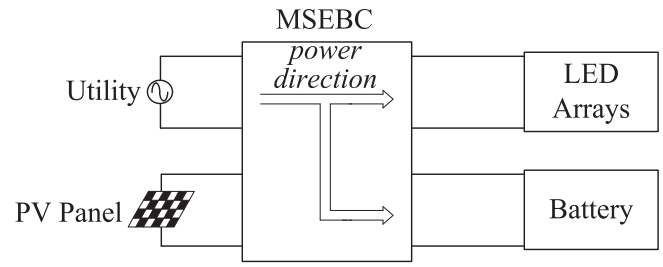

Fig. 3. A diagram to illustrate the power flow direction while the MSEBC works at utility mode.

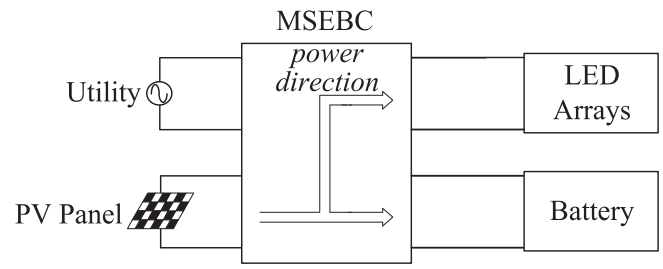

Fig. 4. A diagram to illustrate the power flow direction while the MSEBC works at PV mode.

represent power flow direction is illustrated in Fig. 3. In this mode, utility supplies energy to LED arrays and battery. While operating in PV mode, only PV panel is in charge of power-supply task for LED arrays and battery, as shown in Fig. 4. If encountering both situations of power failure and no irradiation, the MSEBC is capable of performing uninterruptible lighting by drawing power from battery to LEDs. Fig. 5 illustrates the corresponding power flow direction.

3. Operation principle of MSEBC

As mentioned in Section 2, the MSEBC has three operation modes. According to on/off statuses of the active switches in MSEBC, we can classify these operation modes into two categories, Condition 1 and Condition 2. Utility mode and PV mode are classified to be Condition 1, while charging mode is Condition 2. Table 1 depicts this classification.

3.1. Condition 1

When operated at utility mode or PV mode, the MSEBC shown in Fig. 2 can be simplified to Fig. 6. In utility mode, the MSEBC functions as a single-stage PFC, but in PV mode, it is an MPPT dc/dc converter. Under both modes, Q_2 and Q_3 are in off-state. On the contrary, Q_1 is switched at high frequency much higher than line frequency so as to wave-shape and to control input current for

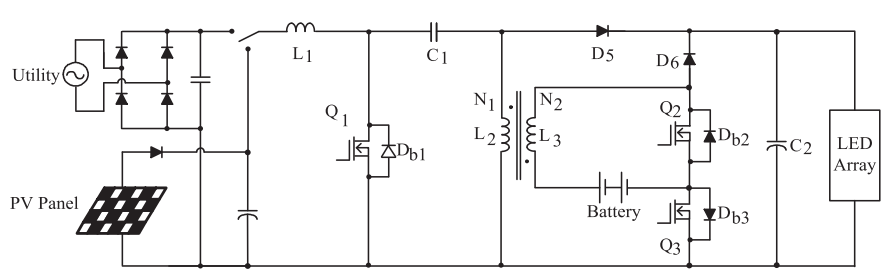

Fig. 2. The circuitry of the main power stage of MSEBC.